amateur radio

Vol. 35, No. 8
AUGUST
1967

25c

Registered at G.P.O., Melbourne, for transmission by post as a periodical

STEREOGRAM & TUNER CHASSIS

Medium fidelity, 4-valve (2 x 6BM8, 6N8, 6N7), Aust. made, straight line dial, 15 ohm output, approx. 3 watts per channel output. As new, fully tested, ideal for use as tuner or built-in unit, etc. **Price $30** inc. **new** valves, or **$25** less valves. MSP 6 inch speakers to suit, $4.50 each.

STEREO RECORD CHANGER

Balfour "Princess" Stereo 4-peed, automatic 10-record changer. Made in England, complete with Ronette ceramic cartridge, brand new in carton. **Price $25** inc. post.

Stereo Record Player, as above, less automatic mechanism. Player only, inc. cartridge, manual operation. **Price $14** inc. post.

Stereo Record Player, very well known make, semi-automatic operation, Ronette ceramic cartridge, 4-peed. **Price $19.50.**

VIDEO PEAKING CHOKES

MINIATURE PIGTAILS, IRONCORE

15 uH., 22 uH., 27 uH., 33 uH., 39 uH., 47 uH., 56 uH., 68 uH., 82 uH., 100 uH., 120 uH., 150 uH., 180 uH., 220 uH., 270 uH., 330 uH., 390 uH., 470 uH., 560 uH. **Price 40c.** Postage 10c.

VERNIER DIALS

Ratio 8 to 1 Reduction, Scaled 0-10.

Type T 501 1½ inch diameter $1.75
,, T 502 2 inch diameter $2.20
,, T 503 3 inch diameter $2.80

CRYSTALS

HC6/U or HC18/U holders.

27.240 Mc., new, $3.50. 26.785 Mc., new, $3.50
Frequencies available: 4852, 5660, 4735, 5205, 5780, 4840 and 5397 Kc. **Three for $2.**

POWER TRANSFORMERS

Type 1992 150-0-150v., 30 mA., 6.3v. 1.75a. $3.75
,, 1993 225-0-225v. 50 mA., 6.3v. 2a. $4.50
,, 2062 Voltage Doubler, 290, 265v. d.c. 80 mA., 6.3v. c.t. 2.25a. $6.75
,, 2064 Voltage Doubler, 340, 315v. d.c. 125 mA., 6.3v. c.t. 2.25a. $8.75
,, Voltage Doubler, 310, 285, 260v. d.c. 100 mA., 6.3v. c.t. 4a. $8.35

NEW MULTIMETERS IN STOCK

PT34 Pocket Multimeter $5.75
200H Multimeter, 20,000 o.p.v. $10.75
CT330 Multimeter, 20,000 o.p.v. $15.75
CT630 Multimeter, 30,000 o.p.v. $19.25

BARGAINS! BARGAINS!

Westinghouse LT91 Rectifier Unit, rated at 1.5 amps. (2 amps.), input 18 volts r.m.s. **$1.25 ea.**
Spring Terminals: black, red and green, **13c ea.**
Ferrite Aerial Rods, flat type, 6 x ½ in., or round type, 8 x 5/16 in., **$1 each.**
R.F. Choke, 2.5 mH., **48c.**
Bib Tape Splicer Kit, **$3.75.**
Sato Baby Electric Key, 2700. **$2.25.**
Hook-up Wire, black, yellow, green, red, white, blue, grey. **4c per yard**, or **$3 100 yd. reel.**
Twin Speaker Lead, white in color. **7c yard.**
3-Core Plastic Covered Cable, **23c yard.**
Twin Crystal Earpiece Wire, **4c yard.**
Stereo Extension Cables, 3-core, 25 ft. length with P.M.G. plug and cable joiner (plug ring tip and sleeve type), **$2.50.**
T.V. Ribbon, black or white or slotted. **7c yard.**
Microphone Cable, shielded: single core, **15c yd.**; double core, **25c yd.**
Q2 and Q1 Coil Formers, **70c each.**

WALKIE-TALKIES

50 milliwatts, 4-transistor, operating freq. 27.240 Mc., crystal locked transmitter, 1 to 5 mile range in open country. **Price $35 a pair**, to clear.

GRID DIP METER, TE-I8

360 Kc. to 220 Mc., in 8 bands, plug-in coils, can also be used as a Field Strength Meter or Signal Generator. Few only at this Price of **$34.**

STEREO PREAMPLIFIER

(FOUR-TRANSISTOR)

Solid state Phono-Tape Stereophonic Pre-amplifier. Matches most types of magnetic cartridges. Specifications: Power amplitude, 45 db. plus or minus 1 db.; maximum output, plus 11 db. in distortion of less than 1 p.c. (900 mV.); noise ratio, minus 45 db. or more; max. input, minus 35 db. (16 mV.); normal input, minus 45 db. (5 mV.); power, 240v. a.c.; complete in metal cabinet. **Price $19.50.**

RECORDING TAPES

Well Known Makes—Brand New—Guaranteed

MAIL TAPES ON 3 INCH REELS

150 ft. Acetate, 1.5 mil. 60c
225 ft. Acetate, 1.0 mil. 75c
300 ft. Tensilised Mylar, 0.5 mil. $1.20
500 ft. Tensilised Mylar, 0.48 mil. $1.60

3¾ INCH REELS

600 ft. Tensilised Mylar, 0.5 mil. $1.75

5 INCH REELS

600 ft. Acetate, 1.5 mil. $1.75
900 ft. Acetate, 1.0 mil. $1.95
900 ft. Mylar, 1.0 mil. $2.25
1200 ft. Mylar, 0.5 mil. $3.25
1800 ft. Tensilised Mylar, 0.48 mil. $5.00

5¾ INCH REELS

850 ft. Acetate, 1.5 mil. $1.95
1200 ft. Mylar, 1.0 mil. $3.50
1800 ft. Mylar, 0.5 mil. $5.00

7 INCH REELS

1200 ft. Acetate, 1.5 mil. $2.75
1200 ft. Mylar, 1.5 mil. $3.25
1800 ft. Acetate, 1.0 mil. $3.50
1800 ft. Mylar, 1.0 mil. $3.95
2400 ft. Mylar, 0.5 mil. $5.00
3000 ft. Tensilised Mylar, 0.48 mil. $7.50
3600 ft. Tensilised Mylar, 0.48 mil. $9.00
Other sizes to order. Postage & Pack 10c reel.

EMPTY TAPE REELS

3 inch 25c; 3¾ inch 35c; 4 inch 35c;
5 inch 40c; 5¾ inch 55c; 7 inch 50c

PLASTIC STORAGE CASES & EMPTY REEL

5 inch 80c; 7 inch $1.20

OR WITHOUT REEL

5 inch 50c; 7 inch 80c

TAPE ACCESSORIES

Leader Tape, 100 ft. white, red or green $1.20
Splicing Tape, 100 ft. ¼ inch 55c
Metalised Switching Tape, 100 ft. reel $1.20
"Bib" Professional Tape Splicer, complete with instructions $3.75

ALIGNMENT TOOLS

Jabel No. 4 Alignment Tool Kits. All popular sizes. Four tools in plastic pouch. **Price $1.20.**

NEW POTENTIOMETERS

Linear or log types. 500 ohms, 1K, 2.5K, 5K, 10K, 25K, 50K, 100K, 250K, 500K, 1 Meg., 2 Meg., 3 Meg., 5 Meg., **Price 90c.**

SATO SLIDER SWITCHES

Small type, d.p.d.t. .... 30c each
Large type, d.p.d.t. .... 40c each

ELECTROLYTIC CAPACITORS

Subminiature, P.V.C. Sheath, Pigtail & Chassis Type

uF.	D.C. W.V.	Price	uF.	D.C. W.V.	Price
1	350	30c	50	150	60c
2	12	25c	50	350	70c
4	350	40c	50 plus 50*	350	$1.35
4	500	45c	100	6	30c
5	6	25c	100	12	30c
5	12	25c	100	15	30c
8	350	45c	100	25	45c
8	500	50c	100	50	55c
10	6	25c	100*	200	85c
10	12	25c	100	350	$1.45
10	25	30c	100 plus 50*	400	$2.00
10	50	30c	200*	350	$1.70
16	350	45c	250	6	30c
16	450	55c	250	12	45c
16	500	65c	250	15	50c
24	350	50c	250	25	50c
24	500	80c	250	50	85c
25	25	30c	500	6	45c
25	50	35c	500	12	65c
30	6	25c	500	15	65c
30	12	25c	500	25	70c
32	350	65c	500	50	$1.15
32	500	95c	1000	15	85c
50	6	30c	1000	25	$1.20
50	12	30c	1000	60	$1.25
50	15	30c	2000	15	$1.00
50	25	40c	2000	25	$1.35
50	50	40c	* P.V.C. can type		

WELL KNOWN MAKE

POTENTIOMETERS (Carbon)

Unswitched, 500 ohm, 1K, 2.5K, 5K, 10K, 25K, 50K, 100K, 250K, 500K, 1 Meg., 2 Meg., "A" Lin. or "C" Log. Any type, **75c ea.** or **3 or $2.**
Unswitched Tapped, 500K tap 40K, 1 Meg. tap 400K Log. **85c** or **3 or $2.25.**
Ganged Potentiometers, Log or Lin.: 50K, 100K, 250K, 500K, 1 Meg., 2 Meg. Any type. **$2.20** or **3 or $6.**

POLYPAK BARGAINS

All New Components, Popular Types

20 Assorted: Mica, Paper, Polyester and Ceramic Condensers $1.00
35 Assorted: Mica and Silver Mica Condensers $1.25
50 Resistors: ¼, ½, 1 w. Preferred Values $1.00
100 Resistors: ¼, ½, 1 w. Preferred Values $1.75

THIS MONTH'S SPECIALS

Transistor Transformers "E" Type:—
Driver 3000 ohm/1330 c.t. $1.00
Output 300 ohm c.t./15, $1.00 or pair $1.75
TR9 output 156 c.t./3.5 .... $1.00
DR1 Driver 4300 ohm/1250 c.t. $1.00

Jabel 1 pole, 12 position Rotary Wafer Switch .... 75c ea., or 3 for $2

Speakers, 2¼ in. diam., 8 ohm voice coil $1.75

I.F. Transformers, Miniature Transistor Radio Type, 1st, 2nd, 3rd I.F., 85c each or Set of Three $2.25.

CHASSIS—ALUMINIUM

Type 1: 5 in. x 3 in. x 2 in. 75c
,, 2: 6 in. x 4 in. x 2 in. 80c
,, 3: 8 in. x 5 in. x 2½ in. $1.00
,, 4: 10 in. x 6 in. x 2½ in. $1.25
,, 5: 11 in. x 8 in. x 2½ in. $1.50
,, 6: 13 in. x 7 in. x 2½ in. $1.50
,, 7: 13 in. x 10 in. x 2½ in. $1.75
,, 8: 17 in. x 8 in. x 3 in. $2.15
,, 9: 17 in. x 10 in. x 3 in. $2.46
,, 10: 17 in. x 12 in. x 3 in. $2.62
(Pack and Post 40c)

HAM RADIO SUPPLIERS

5A MELVILLE ST., HAWTHORN, VIC. Phone 86-6465
323 ELIZABETH ST., MELBOURNE, VIC. Phone 67-4286

North Balwyn tram passes corner of Melville St. **Money Orders and Postal Notes payable North Hawthorn P.O.**

We sell and recommend Leader Test Equipment, Pioneer Stereo Equipment and Speakers, Hitachi Radio Valves and Transistor Radios, Kew Brand Meters, A. & R. Transformers and Transistor Power Supplies, Ducon Condensers, Welwyn Resistors, etc.

"AMATEUR RADIO"

JOURNAL OF THE WIRELESS INSTITUTE OF AUSTRALIA FOUNDED 1910

AUGUST 1967
Vol. 35, No. 8

Editor:
K. E. PINCOTT VK3AFJ

Assistant Editor:
E. C. Manifold VK3EM

Publications Committee:
G. W. Baty (Secretary) VK3AOM
A. W. Chandler (Circulation) VK3LC
K. M. Cocking VK3ZFQ
Ken Gillespie VK3GK
W. E. J. Roper VK3ARZ

Draughtsmen:—
Clem Allan VK3ZIV
Ian Smith .... 36 Green St., Noble Park

Advertising Enquiries:
C/o. P.O. Box 36, East Melbourne, Vic., 3002.
or
Mrs. BELLAIRS, Phone 41-3535, 478 Victoria Parade, East Melbourne, Vic., 3002. Hours: 10 a.m. to 3 p.m. only.

Publishers:
VICTORIAN DIVISION W.I.A.
Reg. Office: 478 Victoria Parade, East Melbourne, Vic., 3002.

Printers:
"RICHMOND CHRONICLE," Phone 42-2419.
Shakespeare Street, Richmond, Vic., 3121.

★

All matters pertaining to "A.R.," other than subscriptions, should be addressed to:

THE EDITOR,
"AMATEUR RADIO,"
P.O. BOX 36,
EAST MELBOURNE, VIC., 3002.

Acknowledgments will be sent following the Committee meeting on the second Monday of each month. All Sub-Editors should forward their articles to reach "A.R." **before the 5th of each month.** Any item received after the Committee meeting will be held over until the next month. Publication of any item is dependent upon space availability, but in general about two months may elapse before a technical article is published after consideration by the Publications Committee.

★

Members of the W.I.A. should refer all enquiries regarding delivery of "A.R." direct to their Divisional Secretary and not to "A.R." direct. Non-members of the W.I.A. should write to the Victorian Division, C/o. P.O. Box 36, East Melbourne. Two months' notice is required before a change of mailing address can be effected. Readers should note that any change in the address of their transmitting station must, by P.M.G. regulation, be notified to the P.M.G. in the State of residence; in addition, "A.R." should also be notified. A convenient form is provided in the "Call Book".

★

Direct subscription rate is $3.00 a year, post paid, in advance. Issued monthly on first of the month. February edition excepted.

CONTENTS

	Page
Technical Articles:—	
"The Thing"—Transistorised—Part Four	7
Transistor Amplifier Design—Part Five	5
Tunable I.F. for Converters	12
W.I.A. Federal Executive:—	
Federal Comment: The Institute and Federation	2
Federal Communication No. 2: What is Amateur Radio?	15
General:—	
Amateur Licences in U.K.	18
Australia's First Orbiting Satellite	3
DX'er of the Month—VK0CR	21
Handicapped Inc.	13
Illegal Transmission	10
New Call Signs	18
Obituary	25
Prediction Charts for August 1967	20
W.I.A. DXCC	21
Contests:—	
VK-ZL-Oceania DX Contest, 1967, Rules	11
13th W.A.E. DX Contest, 1967, Precis of Rules	19
1966 "CQ" W.W. Contest, VK Results	19
Notes:—	
DX	21
Federal and Divisional Monthly News Reports	23
Publications Committee Reports	19
SWL	22
VHF	17
Youth Radio Scheme	19

W.I.A. OFFICIAL BROADCASTS

NEW SOUTH WALES
VK2WI, Sundays, 1100 hrs. E.S.T.

VICTORIA
VK3WI, Sundays, 1030 hrs. E.S.T.
1825 Kc. a.m. 144.5 Mc. a.m.
3600 Kc. s.s.b. 145.854 Mc. f.m.
7146 Kc. a.m. 432.5 Mc. a.m.
53.032 Mc. a.m.

QUEENSLAND
VK4WI, Sundays, 0900 hrs. E.S.T.
3580 Kc. 53.995 Mc.
7146 Kc. 144.36 Mc.
14.342 Mc.

SOUTH AUSTRALIA
VK5WI, Sundays, 0900 hrs. C.S.T.
3.5, 14, 52 and 144 Mc. bands

WESTERN AUSTRALIA
VK6WI, Sundays,

TASMANIA
VK7WI, Sundays, 1000 hrs. E.S.T.
3672 Kc., and re-transmitted by representative stations on—
7146 Kc. 144.1 Mc.
53.032 Mc. 432.6 Mc.

THE INSTITUTE AND FEDERATION

AFTER five year of deliberations on drafts and re-drafts of a proposed Constitution designed to FEDERATE the Wireless Institute of Australia, the Federal Council has now reached unanimity; the differing opinion about many clauses have been amicably resolved; solutions to the wording of clauses affected by Company Law have been found; clauses protecting the rights of members have been written and re-written until all Divisions are satisfied; and so now after all this time and effort the Wireless Institute of Australia has a Federal Constitution which, when implemented in the next month or two, will make the W.I.A. a truly Federal organisation.

This has been effected in five years, yet the desire that it be so, originated many more years ago. Back as far as 1920 the "Wireless Institute of Victoria" moved to form a "federal council" of the Institute representing each State of Australia for the purpose of protecting the cause of Amateur operators at a time when the Navy was in charge of "wireless wavelengths" and not too disposed to issue transmitting permits to those interested in the growing art in an Amateur way.

Historical facts concerning the formation of this federal body in the Institute are currently incomplete, but it is obvious the move was partly successful because the 1st Federal Convention was held in Melbourne in 1924 and the 2nd Federal Convention in Perth the following year. Between 1920 and 1925 the majority of wireless clubs formed after World War I. to pursue the remarkable hobby of "wireless" joined together under the name of the Wireless Institute of Australia and the existing State organisations became a "division" of the Institute.

This "federal council" continued functioning—seemingly without a constitution—serving as a means for a representative or proxy from each State division to meet annually for the purpose of resolving mutual problems. At the Convention in Perth in 1925 the records show a strong desire for Federation when a move was made by the VK6 Division to "discuss suggestions for all the present divisions of the Institute to be incorporated under one Federal body". Coincidentally the original draft of the new Federal Constitution "got off the ground" at the Convention in Perth in 1963!

In 1925 the proposal was obviously discussed but there are no records of any plan getting under way at that stages. During these years the Federal Council—now firmly established—formed its Executive which varied its location between VK2, VK3 and VK5, finally settling down permanently in VK3 when the Federal Council resolved that its Executive "remain in the Division where the Central Administration of the Postmaster-General's Department was located" and that this Division become the "Headquarters Division" of the Institute.

There are obvious reasons why no useful plan to Federate could have been implemented in these early days, the main one being the necessity for the Divisions to be incorporated under Company Law, which they were not, although not long after 1925 at least two Divisions had made this move. Company Law differed between the States too and only within recent years became uniform under the Uniform Companies Act. Secondly, there was no standardisation of divisional constitutions or articles and memorandums of association providing a basis on which true federation could be built. But the idea was on its way.

The very presence of a Federal Council and what it stood for exhibited a real reason for Federation, and so it was that in 1933 Federal President R. D. Elliott (the Executive was then located in VK5) commenced drafting a "uniform constitution to operate throughout the States". It was finally completed in 1939 but was shelved for the duration of World War II.

When Amateurs were licensed to again transmit, this draft was on the agenda for the 1947 Convention. Amendments were resolved and it was finally adopted in 1948 as "The Wireless Institute of Australia 1939 Constitution as Revised in 1947". Although minuted in this way, following its adoption and printing, it became known as "The Federal Constitution of the Wireless Institute of Australia (as Amended) 1947", and with various other amendments from time to time it has served a useful purpose right up to the present time; useful but with many disadvantages which Administrators of the Institute have found detrimental to the expansion and growth of the organisation; and although in name a Federal

FEDERAL COMMENT

Constitution, in practice not a legal document under Company Law, but rather a satisfactory agreement between the Divisions as a basis for federal representation. This has been recognised by Institute Administrators for two decades or more. How to bring about a change was the problem.

In 1949 the Federal Executive, on behalf of the Federal Council, co-opted the late John Moyle to prepare the draft for a "Uniform Divisional Constitution" designed to bring about a uniformity of administration within the Divisions which had, up to this time, been operating in most States under articles and memorandum of association alike in some respects but at variance in many respects and far from being uniform. The Divisions agreed with the idea and the draft tabled in 1950 was accepted, after many amendments, about two years later.

Following this, there were moves to combine the Uniform Divisional Constitution with the Federal Constitution (as Amended) 1947 to become the **Federal Constitution of the Wireless Institute of Australia.**

Major W. T. S. Mitchell prepared a draft constitution based on the combination of the two constitutions. Simultaneously M. J. Owen (VK3) prepared an entirely new draft Federal Constitution. Both were on the agenda of the Perth Convention in 1963, but the Federal Council elected to consider the legal draft prepared by M. J. Owen and this, in its amended form, is the Federal Constitution which has been accepted and ratified by all Divisions. And so ends a brief historical review of how this came about.

But why did it come about? What is it that has made Administrators of the W.I.A. seek, in effect, **Federation** ever since 1920? It seems that two references to the word "**Federal**" sums up the reason adequately:

> "Of the form of government in which two or more States form a political unity but remain independent in internal affairs"

and—

> "Of such political unity as distinct from the separate States comprising it."

Surely this is what has been sought after, for these definitions give force to the administrative requirement of an Institute such as ours—"that it have a strong central governing body distinct from the individual State administrations which remain independent in internal affairs but are united with the Federal body as their Federal representation". The old constitution did not provide for a strong central administration, the new one does.

The general member of the Institute will note little difference, if any, in the function of his Division and what it does for Amateur Radio. But to those who have laboured so hard for five years to bring to fruition the dream of 47 years of seeking an effective Federal organisation will go the unending thanks of the future administrators.

Amateur Radio will have a strong chance for survival under a truly Federal Constitution. Not because it will have any observable effect on the day to day activities of Amateurs, but because it will speed up the inside administration of the Institute and enable benefits to be derived in the long term which have been so protracted under the old system.

My congratulations are extended to all those—past and present—who have worked so unsparingly in achieving this goal.

—G. Maxwell Hull,
Federal President, W.I.A.

AUSTRALIA'S FIRST ORBITING SATELLITE

The Package: The unit is 18" x 22" x 6", weighing 35 lbs. It utilises 20 lb. of manganese-alkali batteries from Union Carbide, U.S.A., which will supply for about three months. It is a completely solid-state package, and all components have been supplied free by Fairchild Australia.

Orbit: The expected orbit (approximate and subject to confirmation) is 500 miles circular, 70° inclination, period 100.9 minutes.

Stabilisation: A bar magnet, interacting with the earth's magnetic field, will stabilise the package to reduce fading of signals to antenna movement as the satellite spins. Magnetic hysteresis rods damp motion on two axes, dissipating the earth's magnetic field energy.

SOME TECHNICAL DETAILS

Electronics: V.h.f. 2 metre transmitter design, output 50 mW. on 144.050 Mc. A.m. telemetry modulation, crystal controlled.

H.f. 10 metre transmitter design, output 250 mW. on 29.450 Mc., commandable on/off a.m. telemetry modulation also (180° cut-off phase with v.h.f.).

Limiter: Schmidt trigger circuit limits the I/C audio signal, giving a square wave output with a well-defined peak-to-peak voltage. The peak-to-peak voltage must exceed 1 volt.

Tuned Amplifier: Series feedback voltage amplifier with tuned load converts I/C square wave to sine wave.

Level Detector: Schmidt trigger, which triggers if the input becomes more positive than the threshold. The threshold is set above voltage reached by sine wave due to third sub-harmonic, but is below that reached by correct tone with about 3 : 1 mark-space ratio. The detector provides a square wave output with a well-defined peak-to-peak voltage.

Delay Circuit: Diode pump circuit, with time constant 1000 cycles—i.e. output voltage is 1/e of final voltage after 1000 cycles of input.

Output Trigger: Triggers when input voltage exceeds threshold of Schmidt trigger. Together with the delay circuit, it provides a delay of 1/5 second between the application of a tone and operation of the output trigger. When tone is removed, the 0.47 uF. capacitor is discharged by the forward base current of the left-hand transistor, and takes about five seconds before the trigger resets.

Logic and Bistable: A diode gate produces a positive going pulse whenever both inputs go positive (i.e., both enable and execute tones received within 5 seconds of each other). Pulse turns on a pull-down transistor in bistable, which remembers the last command received. All circuits use either feedback or saturation to ensure that operation of the circuits is independent of transistor characteristics.

Telemetry: Audio tone measures 8-channel parameter, sequentially switched 10 secs. per channel. The channels could be in this order—1, HI in Morse Code identification; 2, 3, 4, horizon sensors (5% field of view); 5, 6, internal and skin temperatures; 7, battery current drain; 8, battery voltage.

HI Keyer: Produces HI in Morse Code, 2 or 3 per 10 secs.

Command Rx: Receives signals, and produces an audio tone which is passed on to the—

Command Decoder which decodes the signal and switches h.f. transmitter on or off.

The entire operation will be supervised by Project Australis, and not available to any Amateur. H.f. transmitter schedules will be published before the launch.

STATEMENT ON PROJECT

Richard Tonkin, Owen Mace and Paul Dunn arrived back from the United States on Saturday, 17th June, after their trip to formally deliver the Australis Amateur satellite to Project Oscar.

Detail discussions were held with Project Oscar personnel. These discussions covered the design and operation of the Australis Oscar satellite and also plans for a second Australis satellite carrying a repeater.

The design and construction of the satellite was highly praised by all Oscar project officials. Some minor improvements in construction techniques will be considered prior to launching. If necessary one or two back-up modules will be constructed and sent to the United States.

The package arrived in perfect condition and to the great amusement of those Americans and Australians present was found to be complete with "Made in Australia" labels and a large sign reading "God Save The Queen".

The satellite was thoroughly checked out in the Oscar laboratory and was found to be operating perfectly.

The hospitality of Project Oscar to the boys was most warm and friendly and thoroughly appreciated by them. They were afforded the opportunity to inspect a number of Aerospace Companies and facilities to observe first hand the latest satellite techniques which will undoubtedly assist in later Australis projects.

At this time, the date of launching is not known. However, it is expected that the announcement will be similar to those applying to previous Oscar launchings.

Adequate notice will be passed to all State co-ordinators.

AUSTRALIA

THE AUSTRALIAN POST OFFICE HAS A VACANCY FOR AN

Instrument Maker

in its Research Laboratories.

SALARY
$2538-$2800.

DUTIES
Interesting and varied work concerned with the construction, modification and repair of a wide range of scientific electrical and mechanical laboratory equipment.

LOCATION
The APO Research Laboratories are located in the Melbourne city area.

QUALIFICATIONS
Qualifications in Instrument Making are required together with some experience with laboratory type instruments.

LEAVE
Three weeks annual leave together with liberal sick leave and other benefits.

ENQUIRIES
Mr. R. Jepson (Telephone 630-7975. Business hours Mon.-Fri.).

APPLICATIONS
In writing, to — The Director-General, Posts and Telegraphs, Treasury Place, Melbourne, 3002, by 21st August, 1967.

Collins Radio Company's Low Cost

F455FA-21 MECHANICAL FILTERS

for Single Sideband Radio Equipment.

Popularity has accelerated production resulting in an even lower price of **$28.50** INC. SALES TAX.

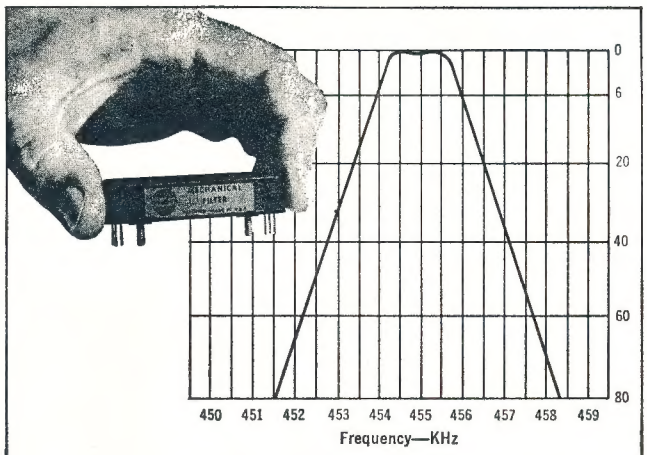

Specifications

Center frequency . . . . . 455 KHz nominal
Frequency response:
Bandwidth, 6 DB attenuation . . . 2.1 KHz nominal
Bandwidth, 60 DB attenuation . . . . . 5.3 KHz maximum
Resonating capacity including circuit . . . . . 130 pf ± 5 pf
DC voltage: 300 VDC maximum potential between terminals and ground.
Source and load impedance . . . . . 100,000 ohms

COLLINS RADIO CO. (A'ASIA) PTY. LTD.
327 Collins St., Melbourne. Tel.: 61 2626

COMMUNICATION/COMPUTATION/CONTROL

COLLINS

COLLINS RADIO COMPANY/DALLAS, TEXAS • CEDAR RAPIDS, IOWA • NEWPORT BEACH, CALIFORNIA • TORONTO, ONTARIO.
Bangkok, Beirut, Frankfurt, Hong Kong, Kuala Lumpur, Los Angeles, London, Melbourne, Mexico City, New York, Paris, Rome, Washington, Wellington.

TRANSISTOR AMPLIFIER DESIGN

PART FIVE

R. L. HARRISON, VK3ZRY*

R.F. POWER AMPLIFIERS

It is now possible to obtain transistors which are capable of producing up to several watts of r.f. power at frequencies into the u.h.f. region. Some transistors are capable of providing 30 or 40 watts of r.f. power up to 30 Mc. —at a price of course! Most transistors should be within the average Amateur's budget though.

The design procedure, especially for a.m., is somewhat different to tubes, but is **not** difficult and, once familiar with it, you should be able to complete a design fairly quickly.

In this article I will not cover s.s.b. and class A linears. This is not because I don't like s.s.b. (I do), it's just that I have not experimented with this particular type of amplifier.

The following design procedure will be for class B, zero bias, r.f. power amplifiers for the following reasons:—

(a) Ease of design (I'm lazy).
(b) Less components necessary (I'm a miser).
(c) Greater power gain than class C (less drive power necessary).
(d) No need to provide or develop a reverse bias source.

So much for the bumpf—on with it.

The first decision you will have to make is whether you want to build a c.w., f.m. or an a.m. transmitter. Having decided that, you now decide on what peak r.f. power output you want (carrier power for c.w./f.m. or peak r.f. power at 100% modulation for a.m.) at the desired frequency. Keep in mind that if you want more than 1 or 2 watts at v.h.f., then you must be prepared to pay quite a few shekels for the privilege. The same might apply at h.f., although more power can be achieved relatively cheaply at h.f.

The second decision you have to make is "which transistor will I use?" You should obtain the characteristics sheets of several suitable transistors (ask the manufacturers). Now pick the transistor(s) that will supply the r.f. output at the desired frequency. Check that the minimum gain-bandwidth product, ft, is 2 to 4 times the desired frequency. If this leaves you with several transistors, choose one with the highest h_{fe} (high frequency current gain), or the cheapest.

C.W./F.M. DESIGN PROCEDURE

1. V_{CC} is determined from the following formula:—

$$V_{CC} \text{ less than or equal to } \frac{B\ V_{CES}}{2}$$

or

$$V_{CC} \text{ less than or equal to } \frac{\text{max. } V_{CEO}}{2}$$

where B V_{CES} is the collector-emitter breakdown voltage, and max. V_{CEO} is the maximum allowable collector-emitter voltage. V_{CC} is less than or equal to the max. allowable collector voltage because the instantaneous collector voltage swings to twice V_{CC} on signal peaks.

2. Now the optimum collector load resistance is given by:—

$$R_C = V_{CC}^2 \div (2\ P_f)$$

where P_f is carrier power as decided above.

3. Now you have to match the collector load resistance R_C to the output load R_L (see Figs. 1a, 1b, 1c). The problem here is to take C_O into consideration. At h.f. C_O will, with most transistors, not be terribly significant. It may become a problem though at v.h.f.

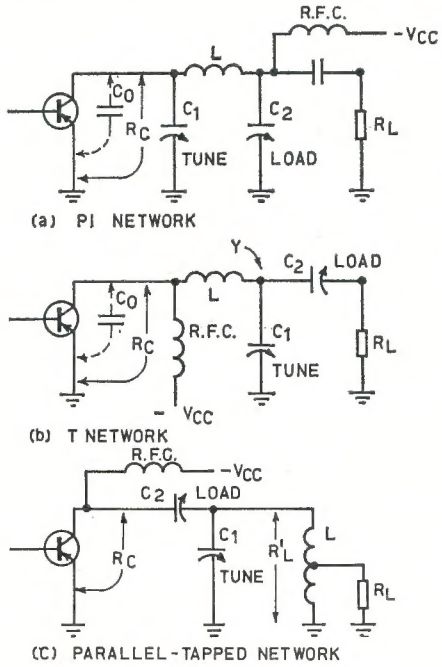

FIG. 1

Now Figs. 1a, 1b and 1c give circuits for the Pi, T and parallel tapped networks respectively. The Pi circuit is good where C_O is only very small or insignificant. Also the Pi network will feed through sub-harmonics of the output frequency more so than the other networks. This may or may not be important. The T and the parallel tapped networks are very handy at v.h.f. Note that they are easily adaptable to co-axial or trough-line configurations. For the design of these networks refer to the heading "Matching Networks".

A.M. DESIGN PROCEDURE

1. V_{CC} can be determined from the following formula:—

$$V_{CC} \text{ less than or equal to } \frac{B\ V_{CES}}{4}$$

or

$$V_{CC} \text{ less than or equal to } \frac{\text{max. } V_{CEO}}{4}$$

V_{CC} is less than or equal to one quarter the maximum allowable collector-emitter voltage because the instantaneous collector voltage swings to four (4) times V_{CC} on modulation peaks (100% modulation).

2. Now the optimum collector load resistance (R_C) is given by:—

$$R_C = (3\ V_{CC}^2) \div (4\ P_f)$$

where P_f is **unmodulated** carrier power.

3. The matching net work is the same as for c.w./f.m. procedure (No. 3) and the same remarks apply.

To modulate the stage of final amplification (p.a. to you) a number of techniques are available. They require whole articles in themselves and, for that reason, I suggest you read "73 Magazine"—Jan. 1965, page 12, and July 1966, page 58.

MATCHING NETWORKS

The **Pi Network** is shown in Fig. 1a. The equations for determining the reactances of the components are as follows:—

1.—

$$X_{C1} = \frac{R_C}{Q_L}\left[1 + \left(\sqrt[2]{R_L \div R_C}\right)\right]$$

where R_L is load resistance (antenna?).
R_C is optimum collector load resistance.
Q_L is loaded Q of circuit. Practical values in the range 5 to 12.

The capacitance of C1 can be found from the nomograph on page 505 of the Amateur Radio Handbook by the R.S.G.B.

2.—

X_L equals approx. X_{C1}

The inductance (L) can also be found from the same graph in the R.S.G.B. Handbook.

3.—

$$X_{C2} = X_{C1}\ \left(\sqrt[2]{R_L \div R_C}\right)$$

The value of C2 can also be found from the abovementioned nomograph.

The **T Network** is shown in Fig. 1b. In this circuit the loaded Q is increased by raising point Y above 1,000 ohms and then transforming down to the load impedance R_L. The reactances of the components can be found by using the following equations:—

(1) $R_Y = R_C\ (Q_L^2 + 1)$

where R_Y is the impedance at point Y.
R_C is the collector load resistance.
Q_L is the loaded Q. Practical values in the range 5 to 20.

(2) $X_1 = R_Y \div Q_L$

(3) $Q_2 = \sqrt[2]{R_Y \div R_C}$

(4) $X_2 = R_Y \div Q_2$

(5) $X_L = Q_2\ R_C$

(6) $X_{C2} = R_L \div Q_L$

(7) $X_{C1} = (X_1 \times X_2) \div (X_1 + X_2)$

The values of L, C2 and C1 can be found from the previously mentioned nomograph.

The **parallel tapped Network** in Fig. 1c is a parallel tuned circuit with the load tapped up the coil. The transistor

* 1 Mary Street, North Balwyn, E.9, Vic.

is capacitively coupled to the tuned circuit via C2. The coil L transforms R_L to a higher resistance R_L^1. Now in practical circumstances the turns ratio is around 3 to 1 or 4 to 1.

Thus: (a) $R_L^1 = 16\ R_L$

or (b) $R_L^1 = 9\ R_L$

Above 100 Mc. the equation in (b) should be used. Below 100 Mc. the equation in (a) should be used.

The reactances of the components can be calculated from the following formulae:—

(1) $X_{C1} = R_L^1 \div Q_L$

Q_L in range 5 to 15.

(2) $X_L = X_{C1}$

(3) $X_{C2} = R_C\ (\sqrt[2]{R_L^1 \div R_C}) - 1$

The values of the components can again be taken from the R.S.G.B. Handbook.

DRIVERS

The driver has to deliver a certain amount of power to the base of the p.a. transistor, and this drive power (P_{in}) can be found on the manufacturer's data sheet.

A number of graphs may be shown. There may be graphs showing r.f. power output versus frequency for different values of P_{in} at certain values of V_{CE}. Or a graph showing P_{out} versus P_{in} for different values of V_{CC} at a specific frequency. By referring to the appropriate graphs the r.f. power needed to drive the amplifier (P_{in}) can be determined.

It will also be found necessary to match the driver to the p.a. base to achieve efficient power transfer. Keep in mind that these networks are not 100% efficient and allow for a reserve of power in the driver above that which is necessary to drive the p.a.

By referring to Figs. 2 and 3 it can be seen that the matching networks are similar to that in Fig. 1c.

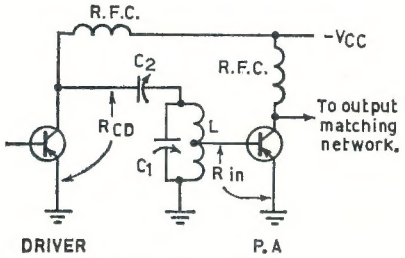

FIG. 2.

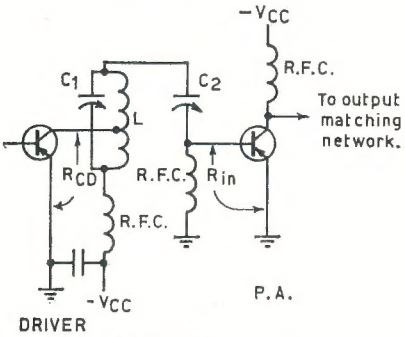

FIG. 3.

The equations for determining the components in Fig. 2 are as follows:—

(a) $R_L^1 = 16\ R_{in}$

or (b) $R_L^1 = 9\ R_{in}$

where R_L^1 is the resistance across the coil, and R_{in} is the base spreading resistance (r_{bb}^1 or h_{ie}) of the p.a. transistor. The same remarks apply here as before.

Now,

(1) $X_{C1} = R_L^1 \div Q_L$

Q_L in range 5 to 15.

(2) $X_L = X_{C1}$

(3) $X_{C2} = R_{CD}\ (\sqrt[2]{R_L^1 \div R_{CD}}) - 1$

where $R_{CD} = V_{CC}^2 \div 2\ P_{in}$

Note: Make sure driver transistor can withstand 2 V_{CC}.

The equations for determining the components in Fig. 3 are as follows:—

(a) $R_L^1 = 16\ R_{CD}$

or (b) $R_L^1 = 9\ R_{CD}$

R_{CD} is the optimum collector load resistance of the driver. $R_{CD} = V_{CC}^2 \div 2\ P_{in}$.

Now,

(1) $X_{C1} = R_L^1 \div Q_L$

Q in range 5 to 15

(2) $X_L = X_{C1}$

(3) $X_{C2} = R_{in}\ (\sqrt[2]{R_L^1 \div R_{in}}) - 1$

where R_{in} is the base spreading resistance (r_{bb}^1 or h_{ie}) of the p.a. transistor.

PARALLEL AND PUSH-PULL OPERATION

If you wish to achieve more power output than one transistor will supply, then parallel or push-pull operation could be employed to double the output.

Fig. 4 shows two transistors in a parallel configuration. The resistors in the emitters are to prevent one transistor from "hogging" the current. The value of R_E would be in the range of 2 to 10 ohms. They should be adjusted initially so that the emitter current of each transistor is equal during actual operation.

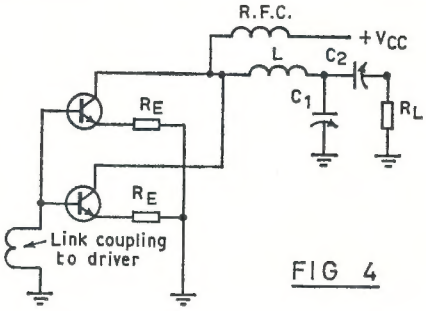

FIG 4

I would recommend that the T network or the parallel tapped network be used in the collector circuit owing to the increase in C_o.

The same equations can be used to calculate the components.

In choosing your transistor remember that the power it should be capable of providing ought to be a little greater than $\frac{1}{2}$ P_f.

Fig. 5 shows two transistors in a push-pull arrangement. Note the similarity to tube circuits. L and C can be found by judicious use of a g.d.o. and the link coupling to the drive should be adjusted for optimum output. Make sure that everything is quite symmetrical to ensure that both transistors receive equal drive.

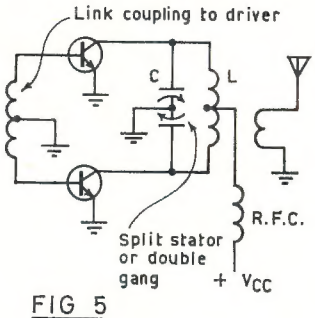

FIG 5

CLASS C OPERATION

Class C operation can be achieved by putting a low value resistor in the emitter or base connections as shown in Figs. 6a and 6b. The drive required for class C is greater than that required for class B but class C efficiency is greater.

The value of the resistor and the drive power are best juggled in practice to achieve best efficiency and output. It appears to be a matter of individual adjustment, even for different transistors of the same type in the same circuit. Note that the emitter resistor is in the order of tens of ohms and the base bias resistor is in the order of hundreds of ohms.

FREQUENCY MULTIPLIERS

Frequency multipliers are just another application of a class C amplifier. The tuned circuit in the collector should be tuned to a frequency two or three times the frequency being injected at the base. I would suggest that a frequency multiplier should not be used as a final owing to the presence of subharmonics in the output.

When using a frequency multiplier as a driver, it should be no more than a tripler as it is difficult to get sufficient drive owing to lowered efficiency. When frequency multiplying it is probably better and cheaper to use doublers throughout owing to greater efficiency and output.

CONCLUSION

Well that concludes this series of articles. I hope that they have created

(Continued on Page 10)

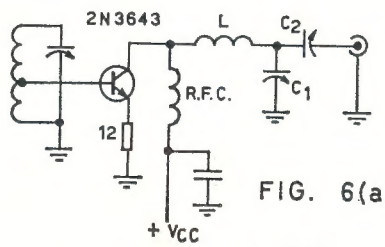

FIG. 6(a)

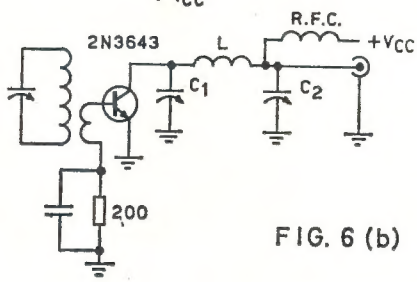

FIG. 6 (b)

"THE THING"—TRANSISTORISED

AN EXPERIMENTAL SIDEBAND EXCITER

PART FOUR

K. A. KIMBERLEY, VK2PY*

HAVING successfully completed the filter section, we now come to the easy part. What could be easier than a crystal oscillator followed by a balanced modulator? Nothing, or so I thought!

It was first intended to use a common emitter oscillator (with the collector current set at 1.0 mA.) feeding into a series type balanced modulator employing two germanium diodes.

Things went well at first, the oscillator worked straight off, even the customary reversal of the feedback winding was not needed. The balanced modulator reduced the carrier down to an almost undetectable level. All this was accomplished without catastrophic failure of transistors or temper.

Next, audio from the transistor "squawk box" was fed into the balanced modulator. The station absorption wavemeter indicated r.f. output that appeared to vary in time with the broadcast band programme. Okay then, the double sideband signal was then fed through the crystal filter.

Up till now, no troubles were evident. However, upon listening to the signals all that could be heard was something that sounded like the wail of an offtuned set of bagpipes. Closer listening eventually revealed that this noise was supposed to be the "Beatles" rendition of "I want to hold her hand". It certainly sounded as though it was being rendered all right (apart!).

Not having an ear for this modern music, the broadcast receiver was then tuned to the A.B.C. and the "Parliamentary Broadcast". The well modulated and articulated voices of our elected representatives would I thought provide ideal test signals. However, the sideband (?) signals still sounded shocking. The honourable member for "Whoop Whoop" raving on "about Strilias Gloria Sarah Tiche" could be just made out among the distortion.

What a let down after the easy start, my old "Finnagle" really had caught me this time.

Well we couldn't let a little thing like this stop us, so . . .

The first step in the investigation was to get out all available literature and do some real heavy reading. What was the nigger in the woodpile? The balanced modulator circuit used was identical with that of several commercial manufacturers. It seemed as though I was caught in a cul-de-sac.

At last the light dawned, being a tube man from way back, I hadn't realised the importance of signal levels when using semiconductors. Going back to fundamentals nearly always allows one to get to the bottom of things and such was the case this time. It appears that in a mixing (modulating) process that the carrier frequency level should be at least (and preferably more) ten times that of the modulating frequency.

Out came the c.r.o. and a session of measurements followed. It was soon found that the ratio of r.f. to audio level was far from satisfactory. In fact the two levels were about level. Accordingly a pad was introduced into the audio circuitry, thus achieving the optimum r.f. to audio ratio. Unfortunately the resulting signals were still nearly as bad. More reading and brain scratching followed. What was the trouble this time? The carrier oscillator was quite stable, the modulator was balanced f.b. and the level ratios were okay. I was about ready to throw the whole thing out of the window until it was realised that transistor batteries falling from the second floor could have disastrous results to passing pedestrians.

Calming down somewhat, it was decided to have a look at the characteristic curves of all the semiconductor devices being used in this section of the exciter. In this manner, it was discovered that germanium diodes need about 0.25 volt to start them conducting and about 1.0 volt to get them into the region of their characteristics suitable for satisfactory modulation.

Here was the trouble in a nutshell, not sufficient r.f. Initially the r.f. level at VK2PY was about 0.3v. p.p., accordingly more turns were added to the output winding of the carrier oscillator coil. Yes you guessed it, the extra damping pulled the oscillator out of oscillation. Ach so, the operating conditions of the oscillator were changed so that the collector current now runs at about 10 mA., thus producing about 3.0v. p.p. of r.f.

The resulting sideband signals were vastly improved, but were still not good enough.

Rather than instal a higher powered transistor with a much higher collector current rating, it was decided to do away with the diode modulator in favour of a transistorised one.

Referring to the circuit, it will be noticed that the transistor bases are in push-pull for audio, the emitters parallel for r.f., whilst the collectors are in push-pull for r.f. The theory of operation goes something like this:

Bias is supplied by the rectification of the carrier, the positive half cycles causes base current to flow and consequently collector current. As the collector circuit is connected in push-pull, the resulting signal should be cancelled out. However, this is not strictly true as both transistors differ from one another. The addition of a balancing pot. in the emitter as well as bifilar winding the collector coil will overcome this problem. When push-pull modulation is fed into the bases one transistor will conduct more than its counterpart and as the cycle reverses its mate will take over. Thus modulation of the r.f. takes place and we now have a nice drop of double sideband being produced.

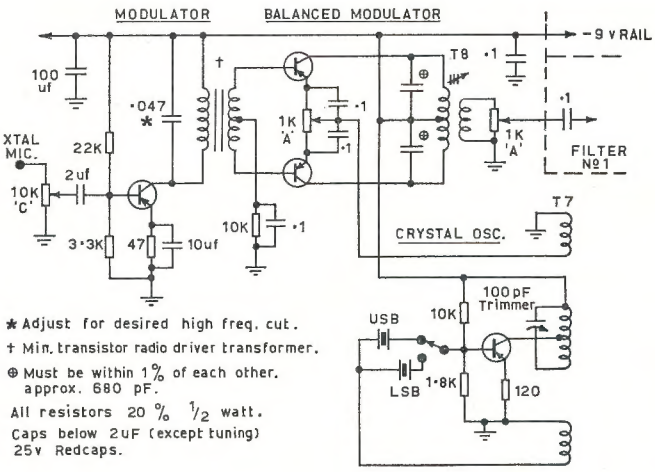

The balancing pot. obviates the necessity of using closely matched transistors in the balanced modulator, however they should not be too different.

The change to the transistorised balanced modulator produced very good signals except that the level was embarrassingly high for the crystal filter and its associated amplifiers. A 1K A curve carbon pot. across the output soon cleared up this problem.

For those Amateurs who have a fetish for getting the last ounce of carrier suppression, it is recommended that the carrier be moved about 300 or 400 cycles so that it falls further down the passband curve of the crystal filter. However, in this case it would not be desirable to curtail the low frequency response of the modulator as described next.

The audio section needs little explanation. Originally a pre-amp. was used in front of the OC72. However this has

* 5 Don Street, Newtown, N.S.W.

CRYSTAL PYE DIVISION

AUSTRALIAN MADE

Close Tolerance Gold Plated Crystals for Amateur Applications

		Amateur Net (each includ. Tax)
★ 1.8 Mc. to 14.999 Mc.	± 0.005%. In Style "D" Holders, ½" pin spacing	$4.85
★ 15.0 Mc. to 47.999 Mc.	± 0.005%. In Style "D" Holders, ½" pin spacing	$5.05
★ 48.0 Mc. to 61.0 Mc.	± 0.005%. In Style "D" Holders, ½" pin spacing	$5.65
★ 100.0 Kc.	± 0.005%. In Style HC13/U Hold., ½" pin spacing	$9.00
★ 1.0 Mc.	± 0.005%. In Style "D" Holders, ½" pin spacing	$9.00

Many other types and tolerances are available from our standard production.
Send for our illustrated Catalogue "Quartz Crystal Unit". Post Free.

MANUFACTURED BY

PYE PTY. LTD.

CRYSTAL DIVISION

Melbourne:	P.O. Box 105, Clayton	Phone 544-0361
Brisbane:	97 Merivale St., Sth.Bris.	4-1571
Sydney:	59 Arundel St., Forest Lodge	68-4111
Adelaide:	1 Ifould St., Adelaide	23-3979
Perth:	151-155 Brisbane St., Perth	28-4338
Hobart:	141 Murray St., Hobart	3-3707
Canberra:	P.O. Box 766	49-6677

FOSTER DYNAMIC MICROPHONES

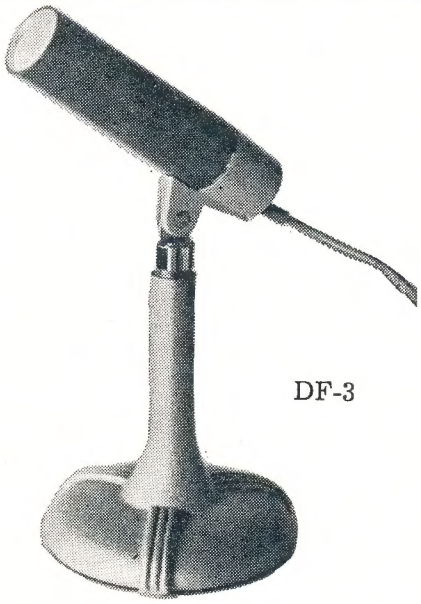

DF-3

SPECIFICATIONS:

Output Impedance .... 50 ohms or 50K ohms
Effective output level .... —55 db. [0 db. = (one) 1V. Microbar]
Freuency response .... 50 to 15,000 c.p.s.

OMNI-DIRECTIONAL DYNAMIC:

Plastic Diaphragm.
Size: 4½" long, 1¼" diameter.
Cable: 12 ft. of P.V.C.
Swivel fits ⅝" 26 t.p.i. Stands.
Colour: TWO-TONE GREY.

Retail Price 50K ohms: $9.60 + Sales Tax $1
Retail Price 50 ohms: $9.40 + Sales Tax 98c

A QUALITY PRODUCT FOR TAPE RECORDERS & P.A. USERS

ZEPHYR

Marketed by **ZEPHYR PRODUCTS PTY. LTD.**
70 BATESFORD STREET, CHADSTONE, VIC., 3148 Phone 56-7231

Manufacturers of Radio and Electrical Equipment and Components

Agents: W.A.— D. K. Northover & Co.; S.A.— Neil Muller Ltd.; Tas.— Homecrafts (Tas.) P/L.; N.S.W.— Jacoby, Mitchell & Co. P/L.; Qld.— T. H. Martin P/L.

since been found to be superfluous as sufficient audio was obtained when the microphone circuitry was fed directly into the base of the OC72.

The low frequency response of the modulator has been kept poor in order to improve the sideband suppression. This was done as follows: Use the cheapest and smallest audio transformer obtainable. The idea here being that the smaller the transformer, the less iron used in its core. This results in a lower inductance and hence the low frequency response is down. The audio coupling capacitor is kept low as is the emitter bypass.

signals generated, the lower the chance of spurious signals being radiated from the finished rig.

As this is an experimental (bread board) set-up, not much time was spent on the heterodyne (local) oscillator. It must be pointed out to the constructor that the heterodyning oscillator is extremely important and great care should be taken with its construction. The unit being described is intended to be developed into a transceiver and as such will transmit on the receiving frequency. This means that the transmitter stability will only be as good as the receiver, so make it good chaps!

lector circuit of the phase splitter. The exact value of the collector tuning capacitors are not important but should be within 1% of each other. 125 volt styroseals have been found satisfactory, both in respect of their smallness as well as stability.

Coil data will be given for 80 metres only. For 160 metres double the capacitor values and increase the inductance as required, whilst for 40 metres half the capacitor and reduce the inductance. The use of adjustable iron cored (or ferramic) coils makes this easy.

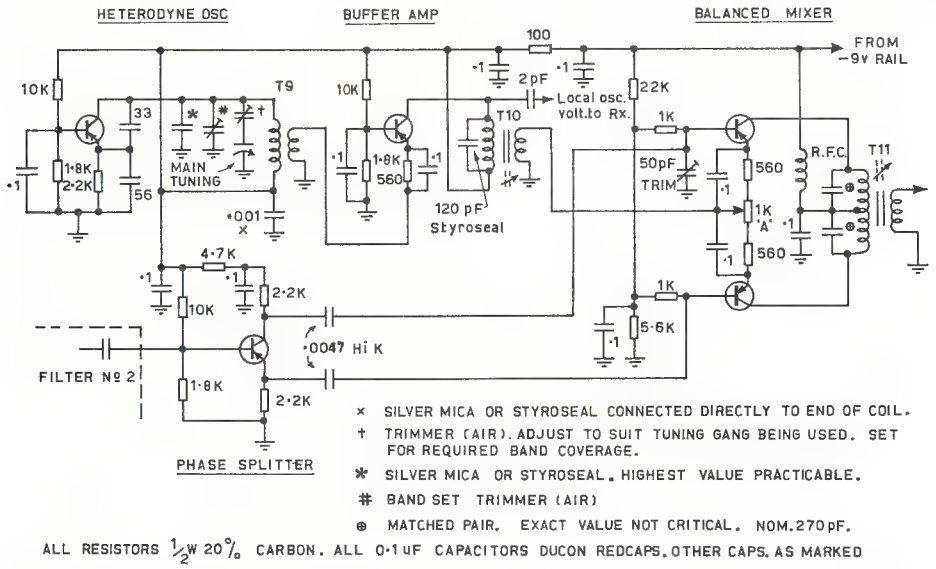

The use of a low value emitter bypass capacitor results in degeneration, and thus loss of gain, which varies inversely with the frequency. The 0.047 uF. capacitor across the primary of the audio transformer limits the high frequency response as well as distortion, however its use and or size is a matter of personal preference.

The foregoing completes the description of the sideband generation and the next step is to heterodyne this signal up to the Ham bands.

HETERODYNING SECTION

Preliminary work here suggested similar troubles might occur as were encountered in the low frequency balanced modulator. Accordingly plans for a single ended type mixer were abandoned. Diode mixers were not even considered.

The balanced push-pull configuration worked so well in the low frequency balanced modulator, that it was decided to use it in the heterodyning section. A slight snag here is the need for sideband signal to be balanced, i.e. push-pull, when fed into the balanced mixer. Not wishing to disturb the output transformer in the crystal filter by a rewind job, it was decided to add a phase splitter between the filter and the bases of the transistors in the balanced mixer.

The use of a balanced type of mixer prevents the heterodyning oscillator signal from appearing at the output of the mixer. It will readily be understood that the less of these undesired

The receiver dial should be accurately calibrated so as to avoid out of band transmissions.

The use of a buffer amplifier after your favourite oscillator circuit provides necessary isolation as well as more drive to the emitters of the balanced mixer. The operation of the mixer is identical with that of the balanced modulator described earlier in the text, hence the mixer operation will not be discussed at length.

The main requirement seems to be that plenty of r.f. drive to the parallel connected emitters is required. The rough balancing out of the heterodyne oscillator is via the pot. whilst final balance is achieved by the careful adjustment of the trimmer wired to the base transistor fed from the col-

POWER SUPPLY

Up till now all experiments have been carried out using a dry battery as a power source. However there is a distressing tendency to leave the battery switch on for extended periods. This usually happens when things are not going "according to Hoyle". When one gets back onto the job, sometime weeks later, the poor old battery is deader than the proverbial "Do Do".

Having just done in the third battery in six months, it was decided to build a power pack. A suitable circuit is to be found in the "Mullard Voltage Regulator (Zener) Diode" Handbook, which is available from Mullards at a very reasonable price.

The following abstract has been taken from the above mentioned publication.

"The power supply shown was developed to replace the dry batteries normally used when a variety of transistor circuits requiring different voltages are handled in a workshop or laboratory. It has an output that is adjustable from 0 to 15v. at 0.5a., thus covering most transistor circuit requirements. Although not fully stabilised, the supply has an adequate performance for most uses, its output resistance being about 0.4 ohm. The supply can be finely adjusted to any voltage within its range and is not damaged by an accidental short-circuit provided that the transformer secondary can supply 2.5 amp.

"The voltage across the centre tapped secondary winding of the transformer is rectified to give two supply lines. One supply line is negative, V1, and the other positive, V2, with respect to the centre tapping.

"The negative line supplies only the voltage regulator diodes, D5 and D6, via resistors R2, R3 and R5. When the current through D5 and D6 is 10 mA.,

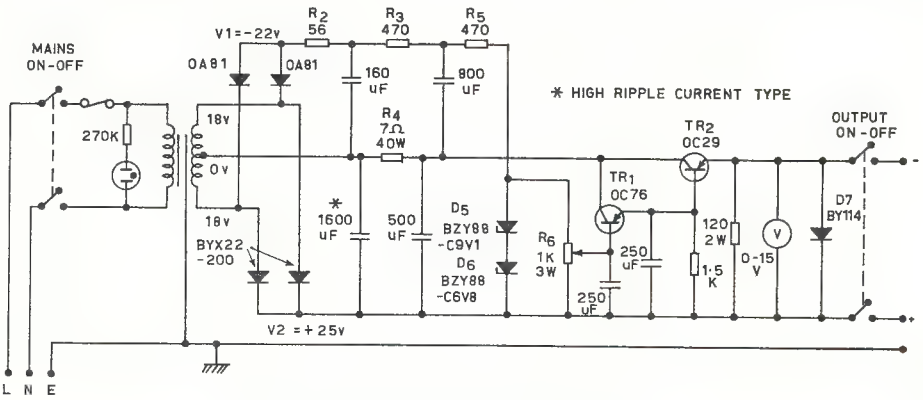

Bench Power Supply for Transistor Circuits.

the voltage across them is about 16v. By means of the output voltage control potentiometer, R6, this voltage or part of it is connected to the base of TR1.

"The positive line supplies the output via the series transistor TR2, which is connected in cascade with TR1 to form a compound emitter follower. Hence, the output voltage at the emitter of TR2 closely follows that at the base of TR1 and is controlled by means of R6.

"Diode D7 is shown connected across the output to prevent damage which would be caused by connecting a reverse voltage to the output terminals. The diode may be omitted where this danger does not exist.

"Should the output terminals be short-circuited, transistor TR2 bottoms. The short-circuit current, however, is limited to just over 2a. by resistor R4 which, therefore, protects TR2. Resistor R4 has a value of approximately 7 ohms and dissipates nearly 40w. when a short-circuit occurs.

"At low output voltages the power dissipation of TR2 approaches 10w.; therefore, the transistor should be mounted on a heat sink having a thermal resistance of less than 2.5°C./W."

This about brings the story to an end. A lot of practical experience has been gained as well as some slight knowledge of semiconductors. Transistors now are cheaper than tubes and require little power for operation in low level applications. Semiconductors should, as a matter of principle, be used in all new equipment. The author, even though he uses them at his place of employment, has strenuously resisted the use of transistors in his own gear, but has at long last been converted. As mentioned previously, all transistors with the exception of the OC72 modulator, were similar to the OC45 series. The actual type used at VK2PY were Ducon SFT107s. OC45 should be interchangeable with the SFT107, however the base bias resistor network may need slight adjustment.. Increasing the bottom resistor results in a larger collector current.

This resistor is adjusted to give the following results:—

Crystal oscillator	10 mA.
Balanced modulator ..	self adjusting
Filter 1 amp.	1.8 mA.
Filter 2 amp.	1.5 mA.
Phase splitter	0.6 mA.
Heterodyne osc.	2.0 mA.
Buffer amp.	3.0 mA.
Balanced mixer	self adjusting

COIL DATA

Oscillator coil, T7:—

Primary 75 turns No. 30 enamel covered wire; collector tap, 15 turns from battery end.

Feedback, 12 turns No. 30 enamel covered wire.

Output, 20 turns No. 30 enamel covered wire.

All windings are layer wound on a Ducon "Ferramic" Toroid Type Q1 F4040/2 with the primary nearest the core.

Note: This same coil is used in the test oscillator described earlier. If the test oscillator is not T9, then add series resistance or capacity to the feedback circuit until the note clears up.

Balanced modulator coil, T8:—

Primary, 37 plus 37 bifilar wound, using No. 36 posyn covered copper wire.

Secondary, 6 turns wound over primary, same wire.

This transformer is wound on a Ducon miniature i.f. assembly.

Heterodyne osc. coil, T9 (80 mx only): The inductance needed will depend somewhat on the circuit used as well as the capacity, both fixed and tuneable. I used a ½ inch diameter air core ceramic former. The number of turns were primary 50 and the secondary 6 turns of No. 30 gauge enamel copper wire.

Buffer amp. coil, T10 (for 80 mx only):—

Primary 40 turns of 42 gauge posyn covered copper wire with collector tap at 20.

Secondary 10 turns wound over the primary.

Wound on miniature Ducon Oscillator Coil Assembly Q1.

Balanced mixer coil, T11 (for 80 mx only):

Primary, 20 plus 20 turns bifilar wound, using No. 42 gauge posyn covered copper wire.

Secondary, 4 turns wound over primary. Former as for T10.

Note: The exact coverage required of T9 and T10 will depend upon the filter and will be equal to the band edges minus the crystal filter (or mechanical) frequency.

FINAL FINAL

After these notes had been written two excellent articles dealing with transistor oscillators have been published in local journals, i.e. the October issues of both "A.R." and "Radio and Hobbies".

— . . . —

ILLEGAL TRANSMISSION

Standby, I'm up on that soap box again. This time to record a case of illegal transmission, downright discourtesy and utter selfishness. A relative newcomer to the band had the "audacity" to fire up on a.m. on 20 metres, calling CQ. Up popped a voice, "We don't want a.m. on this band". No call sign.

I am not trying to "knock" sideband, it is a great technical advancement and here to stay for sure. However, I am speaking for a bit of common courtesy and some small measure of respect for the rights and feelings of others. Since when has not there been room for all modes on this and other bands? There may be circumstances which necessitate the use of humble gear. Why then should the state of a man's bank balance deny him the right to operate on any band, provided he operates within regulations?

While most operators are gentlemen, there is an uncomfortably large number of jackalls hiding 'neath the guise of Amateur operators. Fair go, Aussie—let's try and keep 20 metres as a happy hunting ground, not let it sink to the level of a "pig's paradise".

—Extract from VK6DA's notes, this issue.

— . . . —

TRANS. AMPLIFIER DESIGN

(Continued from Page 6)

an interest in the design and use of transistor amplifiers in Amateur equipment.

Think over your next project, can you transistorise it? Don't just "lift" circuits—design them. It's **not** difficult, don't let the equations fool you. Many of them are as simple as Ohm's Law equations (many of them **are** Ohm's Law equations). You don't have to own a slide rule or possess a communications engineering diploma. Just sit down and carefully follow the procedures—check your results, and there's your design. Now go to it—and the best of British luck to you.

REFERENCES

"Transistor Circuit Design," Texas Instruments.
"The Amateur Radio Handbook," R.S.G.B.
"73 Magazine," January 1965, page 12.
,, ,, April 1965, pages 10 and 52.
,, ,, August 1965, page 24.
,, ,, December 1965, page 50.
,, ,, July 1966, page 58.
,, ,, August 1966, page 20.

WIRELESS INSTITUTE OF AUSTRALIA

FEDERAL EXECUTIVE

The Institute can now offer annual subscriptions to the following Amateur Journals:—

★ **"QST"—Associate membership and renewals, $6.40.**

★ **R.S.G.B.—"The Bulletin" is only sent with membership of the Society. Send for application form and FREE sample copy of the R.S.G.B. "Bulletin," $6.25.**

★ **"CQ" Magazine, $5.20.**

★ **"73" Magazine, $4.50.**

R.S.G.B. Publications and A.R.R.L. Publications available.

Send remittance to Federal Executive, C/o. P.O. Box 36, East Melbourne, Vic., 3002.

VK-ZL-OCEANIA DX CONTEST, 1967

W.I.A. and N.Z.A.R.T., the National Amateur Radio Associations in Australia and New Zealand, invite world-wide participation in this year's VK-ZL-Oceania DX Contest.

Objects: For the "world" to contact VK, ZL and Oceania stations and vice versa. Note: VK and ZL stations, irrespective of their locations, do not contact each other for Contest purposes.

Dates: Phone: 24 hours from 1000 GMT on Saturday, 7th October, 1967, to 1000 GMT on Sunday, 8th October, 1967.

C.w.: 24 hours from 1000 GMT on Saturday, 14th October, 1967, to 1000 GMT on Sunday, 15th October, 1967.

RULES

1. There shall be three main sections to the Contest:—
   (a) Transmitting—phone.
   (b) Transmitting—c.w.
   (c) Receiving—phone and c.w. combined.

2. The Contest is open to all licensed Amateur transmitting stations in any part of the world. No prior entry need be made.

Mobile Marine or other non-land based stations are not permitted to enter.

3. All Amateur frequency bands may be used, but no cross-band operation is permitted.

4. Phone will be used during the first week-end and c.w. during the second week-end. Stations entering both sections must submit separate logs for each mode.

5. Only one contact per band is permitted with any one station for scoring purposes.

6. Only one licensed Amateur is permitted to operate any one station under the Owner's call sign. Should two or more operate any particular station, each will be considered a competitor and must submit a separate log under his own call sign. (This is not applicable to overseas competitors.)

7. Entrants must operate within the terms of their licences.

8. **Cyphers**: Before points can be claimed for contact, serial numbers must be exchanged and acknowledged. The serial number of five or six figures will be made up of the RS (telephony) or RST (telegraphy) report plus three figures which may begin with any number between 001 and 100 for the first contact and which will increase in value by one for each successive contact.

Example, if the number chosen for the first contact is 021, then the second must be 022 followed by 023, 024, etc. After reaching 999, start again from 001.

9. **Scoring:**

(a) For Oceania stations other than VK-ZL, 2 points for each contact on a specific band with VK-ZL stations; 1 point for each contact on a specific band with the rest of the world.

(b) For the rest of the world other than VK-ZL, 2 points for each contact on a specific band with VK-ZL stations; 1 point for each contact on a specific band with Oceania stations other than VK-ZL.

(c) For VK-ZL stations, 5 points for each contact on a specific band and, in addition, for each new country worked on that band, bonus points on the following scale will be added:—

1st contact	....	50 points
2nd „	....	40 „
3rd „	....	30 „
4th „	....	20 „
5th „	....	10 „

For this purpose the A.R.R.L. Countries List will be used with the exception that each call area of W/K, JA and UA will count as "countries" for scoring purposes as indicated above.

10. **Logs:**

(i) Overseas Stations:

(a) Logs to show in this order—date, time in GMT, call sign of station contacted, band, serial number sent, serial number received, points. Underline each new VK/ZL call area contacted. A separate log for each band must be submitted.

(b) Summary Sheet to show the call sign, name and address (block letters), details of station, and, for each band, QSO points for that band, VK/ZL call areas worked on that band.

"All-band" score will be total QSO points multiplied by sum of VK/ZL call areas on all bands, while "single band" scores will be that band QSO points multiplied by VK/ZL call areas worked on that band.

(ii) VK/ZL stations:

(a) Logs must show in this order—date, time in GMT, call sign of station worked, band, serial number sent, serial number received, contact points, bonus points. Use a separate log for each band.

(b) Summary to show—name and address (in block letters), call sign, score for each band by adding contact and bonus points for that band, and "all-band" score by adding the band scores together; details of station and power, declaration that all rules and regulations have been observed.

11. The right is reserved to disqualify any entrant who, during the Contest has not strictly observed regulations or who has consistently departed from the accepted code of operating ethics.

12. The ruling of Federal Contest Manager W.I.A. will be final.

13. **Awards:**

VK/ZL stations: W.I.A. will award certificates as follows:

(1) To the top scorer on each band irrespective of single band or multi-band operation and irrespective of call area, i.e. a maximum of five awards may be made for VK and ZL.

(2) To the top scorer in each VK and ZL call district, i.e. a maximum of 14 awards, 10 VK and 4 ZL awards may be made.

To be eligible for awards in either of the above mentioned categories an operator must obtain at least 1000 points or there must be at least three competing entries in the category.

Overseas Stations: Certificates will be awarded to each country (call areas in W/K, JA and UA) on the following basis:

(1) Top scorer using "all bands" provided that at least three entries are received from the "country" or the contestant has scored 500 points or more.

(2) Other certificates may be awarded, to be determined by conditions and activity.

N.B.: There are separate awards for c.w. and phone.

14. **Entries**: All entries should be posted to Federal Contest Manager, W.I.A., Box N1002, G.P.O., Perth, Western Australia. VK/ZL entries to be received by 16th December, 1967. Overseas entries to be received by 20th January, 1968.

RECEIVING SECTION

1. The rules are the same as for the transmitting section, but it is open to all members of any S.w.l. Society in the world. No transmitting station is permitted to enter this section.

2. The Contest times and logging of stations on each band per week-end are as for that transmitting section except that the same station may be logged twice on any one band—once on phone and once on c.w.

3. To count for points, logs will take the same form as for transmitting, as follows: date, time in GMT, call of station heard, serial number sent by the station heard, band, points claimed. Scoring is on the same basis as for transmitting section and the summary should be similarly set out with the addition of the name of the S.w.l. Society in which membership is held.

4. Overseas stations may log only VK/ZL stations but VK receiving stations may log overseas stations and ZL stations, while ZL receiving stations may log overseas stations and VK stations.

5. Certificates will be awarded to the top scorer in each overseas scoring area and in each VK/ZL call area provided that at least three entries are received from that area or that the contestant has scored 500 points or more.

☆

CONTEST CALENDAR

12th/13th August: Remembrance Day Contest.
12th/13th August: 13th W.A.E. DX Contest (c.w. section).
9th/10th September: 13th W.A.E. DX Contest (phone section).
7th/8th October: VK-ZL-Oceania DX Contest (phone section).
14th/15th October: VK-ZL-Oceania DX Contest (c.w. section).
14th/15th October: R.S.G.B. 21/28 Mc. Telephony Contest.
28th/29th October: R.S.G.B. 7 Mc. DX Contest (phone section).
11th/12th November: R.S.G.B. 7 Mc. DX Contest (c.w. section).

TUNABLE I.F. FOR CONVERTERS

R. A. ISAAC, VK2ZAI*

HERE is an inexpensive eight-valve receiver designed primarily for use with converters. It should prove interesting to Youth Radio Clubs and beginners. A feature of the receiver is bandspreading the first megacycle over half the tuning range (an advantage with any Ham band).

TUNING

The range covered is 6 to 10 Mc. Bandspreading (6 to 7 Mc.) is achieved by inserting fixed condensers in series with each gang and the coils. In my case 100 pF. S.M. with coil data shown.

The tuning condenser used is a miniature by Mullard, found in battery portables with the shut eye over the dial (on/off switch). Any miniature unit with the same capacitance should be suitable.

VALVES

The valve line-up is as follows: R.f. amp., mixer and osc., 6AK5; i.f. amp., 6BA6; det., half 12AT7; S meter, half 12AT7; noise limiter, 6AL5; audio, 12AU7 and 6M5.

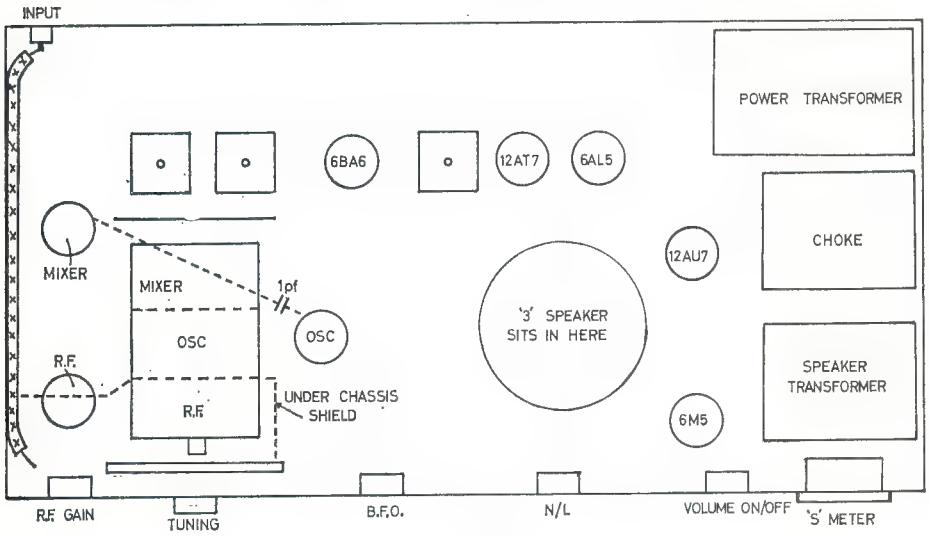

FIG.1.

The r.f. section was taken from an article in a back issue of "A.R." describing the conversion of a SCR522 to f.m.

If care is taken with the shield across the 6AK5 r.f. socket and the aerial connection run in coax., no troubles should arise here. A grid condenser of 200 pF. was inserted to increase the Q of the coil as this was found too broad for my liking. A.v.c. was not applied to the r.f. or mixer although this could be an advantage!

If one follows the lay-out in the r.f. section, it should be able to be made neat and compact (see Fig. 1).

The mixer is basically the same as r.f. except that the 1 pF. coupling condenser should be at the oscillator socket and the lead as short as possible. It might be found necessary to place a shield on the underside of chassis in front of the back-to-back i.f. transformers. This is to stop r.f. pick-up from the oscillator.

I.F. AMPLIFIER

Back-to-back i.f's from the mixer on 455 kc. can be lightly coupled, say 2 pF., to give an increase in selectivity. I used a 10 pF. as there was a slight loss of gain.

An idea borrowed from "Matters Mobile," "A.R." 1962, is an oscillating i.f. valve to act as b.f.o. At 7 Mc. s.s.b. signals can be resolved quite easily with this arrangement.

Just before oscillation takes place with this control, sensitivity and selectivity increase without altering the passband of the amplifier.

NOISE LIMITER

Here again the circuitry was taken from "M/M" and can be made to operate well without too much trouble. All audio leads should be in shielded cable here!

AUDIO

Again this comes from "M/M" with one exception. I did not have a 6BM8 so in went a 6M5. This gives me ample output.

This leads us to the next question—

PERFORMANCE

By courtesy of Mr. Noel Boyd, of Keire Street, Wollongong, I was able to obtain these figures. Sensitivity—

0.63 uV. for 50 mW. at 10 Mc.
0.31 uV. for 50 mW. at 7 Mc.
0.45 uV. for 50 mW. at 6.05 Mc.

Signal to noise ratio: 17 db at 7 Mc.

A word here about the converters. I built a "R.T. & H." 6 mx XSL and tried two different frequencies. If you want to use a 2 mx converter as well and save on XSLs, try a 7.666. This should bring the band edge on both bands close to 6 Mc. This had one disadvantage. A strong oscillation appeared just inside the band on 6 mx. So I moved up to 7.12 Mc. for 52 Mc. with a 7.480 Mc. crystal. The oscillation now appeared about 50 or so kilocycles below 52 Mc. Another one came up about 53.3 Mc., but it does not bother me. Others may have more success.

CIRCUIT DIAGRAM FOR THE TUNABLE I.F. IS ON OPPOSITE PAGE

Two metres with a XSL converter is hopeless at this QTH. Channel 5A cross modulates everything, S8-9 right across the 4 Mc. So I have built up a tunable converter with good results so far. I forgot to mention that Channel 5A is a line-of-site here, about 12 miles as the crow flies, so I cop the peak 200 kW.

Getting back to the receiver, the power supply is conventional, using OA210 dioide (space saver). Talking of space, the receiver measures 12" long, 7" deep and 5" high. I found enough room to fit a 3" speaker on the inside of the top cover. The metal work follows the design of the popular two-way gear, e.g. a box with a shelf say 2" up from one edge, one side being the front panel, a top and bottom lid completes the unit. This saves metal work and sheet metal!

COILS

The coil formers come from disposal gear. A battery transceiver using big old fashioned 2v. filament valves (don't ask me the type number of the gear). See Fig. 2 for dimensions.

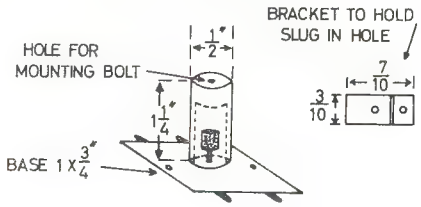

FIG.2.

The r.f. and mixer coil data: 20 turns 26 gauge, c/w. Coupling coil, 5 turns fine interwound, same direction.

Oscillator coil, 18 turns 26 gauge c/w. Five turns fine, 1/16 inch spacing.

There is a disadvantage with this former, mounting them upside down as I did. The top plate hides the coils. So fix these, frequency wise, before applying coil cement, etc.

Details in Fig. 2 should enable those who want to duplicate this former. Everything else should be straight forward in constructing this receiver.

One last thought. I would like to hear from some who attempt this project. Let's know what results you obtain.

* 622 North Cliffe Drive, Berkeley, N.S.W.

HANDICAPPED INC.

Club Should Be Formed in Australia

Take a good look at this photograph of Jim Watts, VE4VJ, of 137 Cordova Street, Winnipeg, Canada, who is a cerebral palsy sufferer (spastic). There, but for the benelovence of Providence, goes you.

Robin L. Harwood, S.w.l. WIA-L7022, wrote in May "A.R." that a national club should be created for the "Shut-ins" (presumably correctly constituted). Such a grand move would enhance Amateur Radio's public relations immeasurably. Those at a later date who read Amateur Radio's history in VK will see at this point of time that we are doing almost nothing in an organised manner for the countless thousands of "Shut-ins" over Australia. Will anyone dispute that this is to our shame. (The U.S.A. has several groups of clubs. One of the best known being the Professional Loafers' Club.)

A nationally founded organisation (call it Handicapped Inc., if you like) would need a considerable number of self sacrificial workers, whose hearts are primarily filled with charity and compassion (uncommon ingredients in today's egocentric world). Are we not big enough to meet this challenge and take Amateur Radio into a new field—that of the humanities? Times are changing fast and Amateur Radio needs a new dimension.

Looked at from the handicapped person's point of view, can you imagine what enjoyment S.w.l'ing or Amateur Radio is to the "Shut-ins"? You can't, because you are not in his shoes. The

indulgences of your daily life are filled with emotions and pleasures that he in a large part is forever denied.

Australia has a fast growing number of para and quadraplegics, besides the sufferers of multiple sclerosis, cerebral palsy and the like, not to mention the pensioners. All these, who are interested, would eagerly accept help in S.w.l'ing and tuition for a ticket. It is possible that the P.M.G. might extend special privileges in some cases. The machinery to set all this in motion is possible. As it is now, the average "Shut-in" must depend on the fraternalness of some nearby Ham for his Amateur Radio interest.

If on reading this, you are inclined to cynicism and feel that the ideals set out are not practicable, either inside the W.I.A. framework or out of it, let me point out that it is this lack of outlook and imagination that is the prime cause of apathy in Amateur Radio today.

—Al Shawsmith, VK4SS.

LOG BOOK

IS NOW AVAILABLE

Larger, spiral-bound pages with more writing space.

Price 75c each

including Postage

Obtainable from your Divisional Secretary, or W.I.A., P.O. Box 36, East Melbourne, C.2, Victoria.

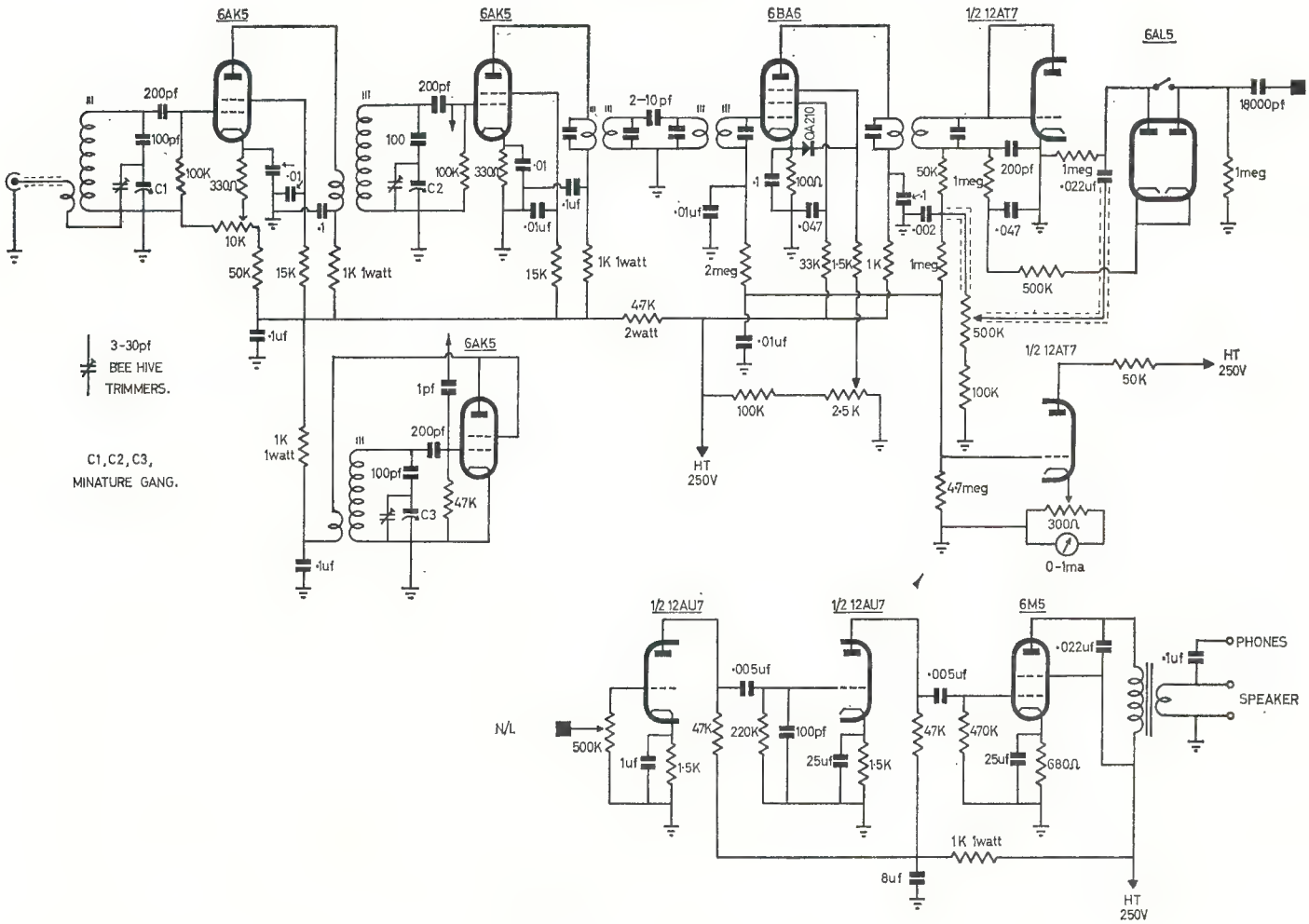

CIRCUIT DIAGRAM OF THE TUNABLE I.F.

WARBURTON FRANKI

PRINTED CIRCUIT COMPONENTS

COPPER BACKED MATRIX BOARD

Size: 3" x 3" **58c**
6" x 6" **$1.75**
9" x 9" **$3.63**

ALSO PLAIN COPPER BACKED BOARD

Size: 6" x 3" **20c**
6" x 6" **36c**
12" x 3" **36c**
9" x 6" **48c**
12" x 12" **$1.24**

Plus S.T. 12½%. Plus Pack and Post 5c.

PROCESS KIT

Contains: Ferric Chloride, Bituminous Paint, Resin, and Instructions.

68c Plus S.T. 12½%. Plus Pack and Post 10c.

IMPORTED ROSENTHAL HIGH STABILITY RESISTORS

1 WATT RATING

- 15 ohms to 8.2 megohms ± 1%.
- 11 megohms to 30 megohms ± 2%.

18c each plus S.T. 12½%.

Write or call for lists of sizes available.

SPEAKER TRANSFORMERS

E TYPE. 5,000 or 7,000 ohms to 3.5 ohms.

$1 plus S.T. 25%. Pack and Post 15c.

AUDIO AMPLIFIER MODULES

Four-Transistor: 1 watt output.
High Impedance input: 100K ohms.
Low Impedance input: 1K ohms.
Output Impedance: 4, 8 or 16 ohms.
Power source: 6 volts.
Gain: 70 db.
Size of board: 4½" x 2" approx.
Supplied with circuit and wiring instructions.

$7.50 plus S.T. 12½%. Pack and Post 20c.

VIBRATORS

V6804: 4 volt, split reed, synchronous.

$1 plus S.T. 25%. Plus Pack and Post 15c.

V6632: 32 volt, dual interrupter, non-synchronous.

$1 plus S.T. 25%. Plus Pack and Post 15c.

HOOK-UP WIRE

P.V.C. 5/010. 200-yard reels. Green or Yellow.

$2.40 reel plus S.T. 25%. Pack and Post 20c.

POWER SUPPLY BASIC KITS

- For supplying 9 or 12 volts D.C. at 500 mA. Comprising A & R Transformer, Contact Cooled Rectifier, and 1000/15 Filter Capacitor.

$3.00 including S.T. and Postage.

- To give 250 volts D.C. at 60 mA. and 6.3 volts A.C. at 2 amperes. Comprising A & R Transformer, Contact Cooled Rectifier, 50 plus 50/350 Filter Capacitor.

$5.50 including S.T. and Postage.

WARBURTON FRANKI

220 PARK ST. SOUTH MELB., VIC. PHONE 30 lines **69-0151**

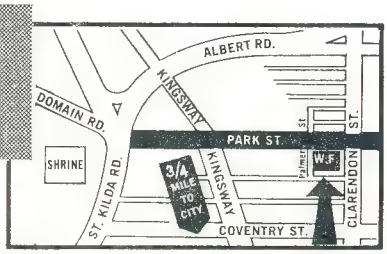

OPEN SAT. MORNING

●

Please include postage or freight with all orders

FEDERAL COMMUNICATION No. 2

WHAT IS AMATEUR RADIO?

JOHN BATTRICK,* VK3OR, FEDERAL SECRETARY W.I.A.

OF course we all know the answer to this! But do **they** all? "They" being the countries which did not appear to warrant placing in the "for us" column (if you did last month's homework).

What is the benefit to them in allowing an allocation of the frequency spectrum to a **hobby**? Place yourself in the position of an administrator of an "emerging nation"—you find your nation has emerged into a world where the frequency spectrum is already carved up and allocated. There is already a spectrum management organisation (I.T.U.) in existence, which **may** be able to allot you some frequencies for your communication services. You would press your claims for such allocations, but can you afford the luxury of supporting "ham radio" in other countries (and your own) at the expense of your country's other radio services?

The answer to that question, and the attitude in those countries, is one of the vital things affecting Amateur Radio both here and all over. It would be fair to state that Australia is "Amateur-oriented"—we have over 5,000 licensed Amateurs, activity is widespread and sophisticated, in fact if you notice the cover of our "Handbook," it is for operators in the AMATEUR SERVICE.

This, I believe, is the image that Amateur Radio must project within this country and more importantly, in the developing countries; the image of a SERVICE, not just a "hobby"!

Perhaps then we can take our place alongside other radio services in the spectrum allocations. With all the righteous indignation and all the protestation of our "rights" we can muster we cannot expect to retain valuable spectrum space unless it can be demonstrated that a country can benefit from having an Amateur Service. This must be demonstrated **especially to the newer nations who vote at I.T.U.**!

It is with this philosophy as background I would like to refer to a 110 page research report, published by the Stanford Research Institute in U.S.A. entitled:—

> **"Amateur Radio: An International Resource for Technological, Economic and Sociological Development."**

This was commissioned by A.R.R.L. and the objectives of the research were:

1. To develop information relating to the technological, economic, and sociological contributions of the Amateur Radio Service to the national welfare.
2. To examine and assess the position of the Amateur Radio Service in relation to other vital radio services.
3. To present the information in a form suitable for dissemination primarily to:
   (a) Telecommunications officials of other nations and their delegations to international radio conferences.
   (b) Telecommunications officials of the United States and its delegations to international radio conferences.
   (c) Officials of the A.R.R.L.

(This research did not include any attempt to rank the relative values of the services contending for spectrum space. Rather, it attempted to examine the performance of the Amateur Radio Service in the United States and elsewhere in the light of its stated purposes.)

The Institute project team examined the Amateur Radio Service in terms of its ability to contribute to a nation's welfare in three broad categories:

1. **Technological.**—As an actual and potential resource for the development and maintenance of a nation's scientific, engineering and technically trained manpower.
2. **Economic.**—Its impact, both direct and indirect, on a nation's economy.
3. **Sociological.**—Its impact on a nation's sociological structure, including its value as a cogent and credible projector of a nation's image abroad and as a contributor to international goodwill.

The report contains over 100 pages of detailed findings and includes tables, charts, diagrams, etc. (A copy has been sent to each Divisional W.I.A. Library by Federal Executive.) In June "QST" the summary which appears, on pages 60-61, is a reproduction of a diagram indicating the history of frequency allocations to the Amateur Radio Service 1912-1965. This indicates clearly that as a result of increased demands by other users for space, some of the original Amateur assignments have been reduced, and Amateurs have been required increasingly to share parts or all of some of the bands with other services in all the regions of the world. This is especially evident in the 160, 80 and 40 metre bands.

Today, Amateurs have access to a total of 3,500 Kc. in six bands between 1,800 Kc. and 29.7 Mc. **However, only 2,600 Kc. of the 3,500 Kc. is exclusive.**

While a relatively large amount of spectrum space in the region above 120 Mc. was allocated exclusively to the Amateur Service at the 1947 I.T.U. Conference, virtually all of the exclusivity was withdrawn 12 years later at the 1959 I.T.U. Conference, and a new trend may have been established. The Amateur Service may have permanently lost an opportunity to retain exclusive allocations in v.h.f., u.h.f. and microwave bands since radiolocation and other services established themselves more rapidly and were therefore in a strong position to achieve primary allocation.

One thing is apparent: **further reductions or even relatively modest changes in spectrum allocations at future radio conferences are likely to result in the reduction or loss of many of the vital functions that are now performed by Radio Amateurs and could change the nature of the Amateur Service permanently!**

Both broad-scale innovation and investment could be discouraged, because the effort to overcome new constraints caused by reduction of spectrum space, has become increasingly costly. Thus it appears that a long term net loss to all nations might result, rather than any hoped-for improvement in benefits received for spectrum space invested in other services.

The S.R.I. Report concludes in summary: "The information developed in this study leads to the conclusion that the Amateur Radio Service is a national and international resource whose curtailment would constitute a serious loss to the technological, economic, and sociological welfare of all nations. Its status as a non-profit, voluntary public service organisation suits it uniquely to its primary purpose, to serve the public interests in the countries in which it operates. But of equal importance is the effect of the service as a stimulus to economic growth. In addition to the economic stimulus resulting from the manufacture and sales of Amateur equipment, the service has indirectly influenced economic development, as equipment and techniques developed for Amateurs have been adapted for commercial and governmental uses. Radio Amateurs have also played a significant role in the development of the state of the radio art, and, even with the advanced stage of current technology, they are continuing to make major contributions both to basic radio theory and to practical applications.

"Importantly, the costs of the services rendered by Radio Amateurs are borne by the Amateurs themselves, without any commitment of public funds. This fact, in combination with the professional quality of the technical expertise of Radio Amateurs and the impetus to all phases of national development that results from their activities, makes the Amateur Service an especially desirable adjunct to the communications plants of new and developing countries."

The following is a listing of specific contributions made by the Amateur Radio Service. Although the contributions are closely interrelated, they are grouped according to the category of their primary influence.

TECHNOLOGICAL

- Constitutes a source of new techniques and new technology in commun-

* P.O. Box 365, Frankston, Vic.

ications and electronics and stimulates the development of these in other fields.

- Provides a broad base for experimental test of theoretical predictions and for participation in large scale investigation in a variety of scientific areas.

- Provides a medium for self-training in, and improvement of, communications and electronics skills.

- Provides a medium for rapid and widespread exchange of communications, electronics, and other special knowledge and techniques.

ECONOMIC

- Advances the economy through the manufacture and sales of Amateur Radio equipment.

- Advances the economy indirectly through extension of Amateur Radio and related equipment into the professional, consumer, and government markets.

- Provides a source of trained manpower and impetus for an expanding communications and electronics manufacturing capacity.

- Appears to play a significant role in raising the general level of technological knowledge.

SOCIOLOGICAL

The contributions made by the Amateur Service in this category are of two types: communications services and indirect contributions to the general welfare. Some of the contributions in this category are unique to the Amateur Service; many have come to be regarded as vital.

Vital Communications Services

- Provides emergency communications in support of disaster relief organisations (e.g. fire, police, other public service agencies).

- Disseminates news when other communications systems have temporarily failed.

- Broadcasts warning of potential natural or other disaster.

- Provides special communications support for medical crises and other medical functions.

Non-Vital Communications Services

- Provides short, medium, and long distance point-to-point communications of a specialised nature, such as for scientific expeditions and for servicemen and other emissaries of a country abroad.

- Projects a nation's image abroad more credibly than do international broadcasts.

- Assists in the development of international understanding and goodwill through person-to-person contacts.

- Provides communications support for special community and other functions (e.g. Boy Scout Jamborees, etc.).

Indirect Contributions to the General Welfare

- Provides incentive for scientific, engineering, and technical careers.

- Provides a reservoir of trained communications and electronics specialists.

- Provides impetus for a broader and more technically sophisticated education system.

- Where commercial telecommunications are minimal, helps to bring people of isolated regions of a country together under a common national bond.

- By **self-policing**, lightens the administrative burden of a nation's spectrum managers.

The Amateur Service is exceptionally conservative of spectrum space when the ratio of services rendered per kilocycle of spectrum allocations is considered. Any other radio service, performing the same functions to the same degree, would require not only a larger commitment of public funds, but also significantly more spectrum space than is now allocated to Radio Amateurs.

SIGNIFICANT CONTRIBUTIONS

While the above image is one which, generally speaking, has been projected successfully in technically advanced countries (such as U.S.A., U.K., Australia, etc.)—**and it must continue to be so**—how is it to be so projected in newer developing, I.T.U. voting countries?

Firstly by establishing an Amateur Service.

The Amateur Radio Service can make significant contributions to new and developing countries in every sector that has been discussed in the S.R.I. Report. Moreover, the contribution in some sectors can be relatively greater for these countries than for countries that have progressed further technologically. For instance, the relatively modest diffusion of the telecommunications plant in developing countries can benefit greatly from Radio Amateur message-handling operations. The more extensive the Amateur system, the more benefits will accrue. To encourage the maximum growth of the Amateur Service, a country may undertake one or all of at least six actions:

1. Encourage and officially sponsor the organisation of local Amateur Radio clubs.
2. Encourage equipment purchases for licensed Amateurs by reducing or eliminating tariffs on certain components and equipment.
3. Assist in the dissemination of technical literature.
4. Design licensing requirements so that a variety of operating preferences will be accommodated.
5. Increase the number and scope of technical courses in the curricula of the educational systems.
6. **Support allocation of adequate frequency bands for Radio Amateurs in international radio conferences.**

The last point is the crucial one.

BRIGHT STAR CRYSTALS

FOR ACCURACY, STABILITY, ACTIVITY AND OUTPUT

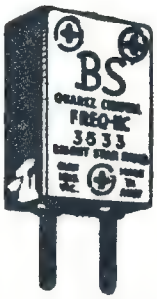

Our Crystals cover all types and frequencies in common use and include overtone, plated and vacuum mounted. Holders include the following: DC11, FT243, HC-6U, CRA, B7G, Octal, HC-18U.

THE FOLLOWING FISHING-BOAT FREQUENCIES ARE AVAILABLE IN FT243 HOLDERS:

6280, 4095, 4535, 2760, 2524 Kc.

5,500 Kc. T.V. Sweep Generator Crystals, $7.25; 100 Kc. and 1000 Kc. Frequency Standard, $17; plus Sales Tax.

Immediate delivery on all above types.

AUDIO AND ULTRASONIC CRYSTALS—Prices on application.

455 Kc. Filter Crystals, vacuum mounted, $13 each plus Sales Tax.

ALSO AMATEUR TYPE CRYSTALS — 3.5 Mc. AND 7 Mc. BAND.

Commercial—0.02% $7.25, 0.01% $7.55, plus Sales Tax.
Amateur—from $6 each, plus Sales Tax.
Regrinds—Amateur $3, Commercial $3.75.

CRYSTALS FOR TAXI AND BUSH FIRE SETS ALSO AVAILABLE.

We would be happy to advise and quote you.

New Zealand Representatives: Messrs. Carrel & Carell, Box 2102, Auckland.
Contractors to Federal and State Government Departments.

BRIGHT STAR RADIO

LOT 6, EILEEN ROAD, CLAYTON, VIC. **Phone 546-5076**

With the co-operation of our overseas associates our crystal manufacturing methods are the latest.

VHF

Sub-Editor: CYRIL MAUDE, VK3ZCK
2 Clarendon St., Avondale Heights, Vic., 3034

Well there's nothing new to report this month except that a couple of new beacons are in operation. The first is a two metre beacon and is located at Devonport, Tasmania. This beacon has a power input of 15 watts to a QQE03/12 feeding stacked cloverleaves 10 feet high, 100 feet above sea level. The transmitter is keyed c.w. and 400 c.p.s. tone and is using the call sign VK7VF. Its location is at Don Heads at the transmitting site of 7AD Devonport. The beacon is operating on a frequency of 144.9 Mc.

The second is Launceston's t.v. channel 1 repeater, the sound of which is on 62.75 Mc.

In the near future I hope to give an accurate and up to date list of beacons and net frequencies in use in Australia and New Zealand. Correspondents could assist by letting me have the appropriate information as early as possible.

It would be most helpful if the following details are given: mode, polarisation, and frequency to the third decimal place. Cheers and 73, Cyril VK3ZCK.

NEW SOUTH WALES

Owing to a sudden recall of Peter Ford to New Zealand the June meeting of the V.h.f. and T.v. Group was left without a lecturer. The evening was not lost, however, as Phil VK4ZEE expounded the position of v.h.f. activity in Townsville, Qld. Some hearts must have been broken as Phil went on to such subjects as how to handle a dog-pile of JA stations on 6 metres.

During the business portion of the meeting a motion was carried to the effect that originating stations on the v.h.f. broadcast should use a.m. unless a good quality relay using this mode was available. Your scribe must plead guilty to the charge of radiating 75w. of s.s.b. as well as 25w. of f.m. during recent v.h.f. broadcasts. In defence, I must admit that even Amateurs using Command receivers had no difficulty in resolving the thing. Your cue, PanSy, how much was the bride?

The big news of activity in N.S.W. is the approaching V.h.f. Cabaret to be held on Friday, 15th September. This is the social event of the year and the four-course supper and professional entertainment should satisfy both gourmet and connoisseur. Accommodation is limited to 200 persons and it is expected that all seats will be sold by the time this is printed. If you have not already acquired your tickets contact Norm VK2ZXC as some unfortunate person may have been forced to cancel his bookings. The proceeds from this event will help pay for improvements to the v.h.f. facilities at Dural.

One of the new items under way for Dural is a 144 Mc. converter with low cross-modulation characteristics. This should go a long way towards removing objectionable spotting from t.v. channel 5A. Also under construction for Dural is a 432 Mc. varactor multiplier.

Our new section, 432 Mc. Moon-bounce team, is sponsoring a 432 Mc. converter kit and interested parties should contact Gordon 2ZXD.

Interstate and country operators please note that the N.S.W. V.h.f. New Year Field Day will take place as usual so start making plans to join in the fun and reserve your favourite mountain top.

At the time these notes are being written it is understood that the August meeting will have the services of George VK2ZDR as lecturer. His topic will be Practical Equipment Construction with the emphasis on metal-working. I've booked a front row seat for this lecture. Remember visitors are always welcome on the first Friday of the month at Wireless Centre.

Other activities of the Group include monthly fox hunts on 6 and 2 mx and new "hounds" are eagerly sought. At the end of each 12 months prizes are awarded to the contestants amassing the most points in these events.

A final thought for the month. Have you refreshed your memory of Amateur Regulations lately? If not, why not do so and avoid the risk of an official QSL card. Remember, on the air as well as the road, "courtesy is catching". 73, Keith VK2ZAU.

HUNTER BRANCH.—6 mx: This band has been very quiet, in fact there has not been much activity at all, even the Saturday and Sunday hook-ups have had poor attendance. Paul Lindsay, of the West Lakes Radio Club, heard some VK5s on the t.v. set at his home QTH (what channel?—Sub. Ed.) Maybe his luck is better than most of us.

2 mx: At times activity has been quite good with Sydney being heard. VK2ZCT, VK2YJ, and VK2ZSG seem to be the only ones who have been able to work the big smoke. Sydney appears to be a dead loss from this QTH. Bill VK2XT has a fair signal from his Lakeside QTH at Carey Bay—Bill's portable location. A newcomer to the district is Bob VK-2ZTR, using a 522 from Warners Bay. 73, Mac VK2ZMO.

VICTORIA

Both six and two metres have been fairly active with a little DX activity. On two the DX signals have been coming from Eastern VK5, Northern VK3, Southern VK2 and Northern VK7. As far as six metres is concerned, they have been very sporadic and have been to Queensland. One report has been received that a Geelong station has managed to work a JA on this band. The date was the 21st June and the time about 5.30 p.m. E.A.S.T.

There appears to be an increase in popularity for s.s.b. on v.h.f. here in Melbourne, with 10 stations using this mode of transmission.

The V.h.f. Group's converter project is now well under way with completed prototypes for both 6 and 432 Mc. showing more than adequate gain and quite reasonable noise figures and low cross-modulation characteristics. These converters are using semiconductors including v.h.f. FETs. These converters should cost no more than the popular valve types at present in use and well within the reach of all v.h.f. Amateurs.

The V.h.f. Group Field Days for the coming summer season are: Oct. 15, Nov. 19, Dec. 17 (not finalised), Dec. 31 and Jan. 1, Jan. 20, Feb. N.F.D., and Mar. 17.

Until next month, 73 and good DX, Cyril VK3ZCK.

GIPPSLAND: 6 metres: The following DX signals have been heard:

5/6/67—1415-1445	hrs.	N.Z. Ch. 1 t.v.
19/6/67 1400-1705	,,	,, ,, ,,
20/6/67—1330-1445	,,	,, ,, ,,
21/6/67—1240-1300	,,	,, ,, ,,
1545-1615	,,	VK Ch. 0 t.v. Brisbane.
1600-1635	,,	VK Ch. 1 A.B.C. test pattern, programme.
1615-1630	,,	another Ch. 1 beating with above.
1943-1948	,,	Ch. 0 Brisbane with several strong peaks.
25/6/67—1015-1030	,,	Ch. 0 Brisbane, rapid flutter type QSB.

2 mx: Nil DX. Some local a.m. activity and a lot of Ch. A and B f.m.

At our convention held this month at Maffra we decided to hold the Eastern Zone hook-up on v.h.f. at 2000 hrs. E.A.S.T. every Sunday evening on Channel A. The Zone is using Ch. A as the listening frequency and Ch. B as the over flow channel as it does not suffer Ch. 4 QRM. 73, George VK3ZCG.

TASMANIA

Not a great amount of news this month but activity is on the increase, so we can expect more news in the coming month. As mentioned a couple of months ago, two television translator services would be starting and have, in fact, done so. These translators have been installed to cover the eastern section of Launceston, which is a bad signal area for the transmitters at Mt. Barrow. Channel 9 is translated to Channel 11, and Channel 3 is translated to Channel 1.

Two Metres: The activity on this band at the moment is usual for this time of the year. Up until the time of these notes being compiled, no mid-winter openings have been reported to me as yet. Mike VK7ZMC has recently installed a new wind-up tower of approx. 80 feet to support a 10 el. yagi on 2 mx and a ground plane on 6 mx. Mike's two metre frequencies are 144.059 and 144.33, running 75w. input. There are a number of f.m. mobiles becoming available in the north-west and northern zones in the near future, so a two metre f.m. net will soon be starting up.

432 Mc.: The only stations on this band to my knowledge are Reg VK7RL, Len VK7BQ and Colin VK7LZ. Colin VK7ZCP will be building gear for this band in the near future.

1296 Mc.: There are two Launceston Amateurs who are in the process of building gear for this band. They are Colin VK7ZCP and Colin VK7ZLX. Both these stations hope to have equipment going on this band in about 2 or 3 months, so you 1296 Mc. enthusiasts keep an ear open for these two chaps in the near future. 73, Brian VK3ZBR/P/VK7.

NEW ZEALAND

The New Zealand Post Office has announced that approval has been given for the establishment of v.h.f. beacon stations in the 144, 432 and 1296 Mc. bands. The Auckland V.h.f. Group intends to apply immediately for the 144 Mc. licence as the transmitter is operational but needs minor modifications. More details will be given when they become available. Eric ZL1ADE has just received his VHFCC for 432 Mc. (What about that you Australians?)

Reprinted from the Auckland V.h.f. Group (Inc.) Newsletter.

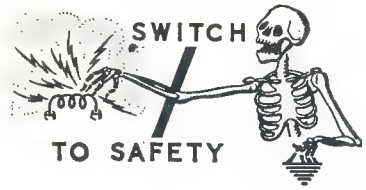

ARE YOU . . . READING "73"?

If you are a DX-er, a VHF-er, or a home constructor; whether your interests are SSB, RTTY, microwave, low brow or high brow, valve, transistor or integrated circuit, "73 Magazine" has something for you each and every month. Every month "73 Magazine" publishes over 30 technical and construction articles — more than the other Ham magazines put together. Since there are so many pages of technical material in each issue, "73" can well afford to have something for every reader; the other Ham magazines just do not have the space. In addition, many of the latest electronic developments have been first introduced to the Ham fraternity from the pages of "73 Magazine." So, should not you be reading "73"?

You are probably thinking that a subscription to "73" is expensive. No, it isn't. Why? Because we want you to try it and become addicted. $5.00 U.S. per year world wide. VK Amateurs may subscribe direct to "73 Magazine," Peterborough, N.H. 03458, U.S.A., or through W.I.A., P.O. Box 36, East Melbourne, Vic., 3002, for $A4.50.

Why specify PrecisionWindings' printed circuits?

As Australian industry moves into an electronic era new applications for printed circuits are developed every day . . . and design engineers expect their printed circuit suppliers to be versatile and flexible.

Constant research and scientific evolution of production techniques at Precision Windings' plant assures first grade manufacture; even relatively small quantities can be produced economically.

PW's photographic process **does** have many advantages . . . definition is crisp and clear, negatives are readily available for alterations, quality control during manufacture is precise. This is why more and more industrial organisations specify Precision Windings printed circuits.

Delivery is prompt and prices most competitive . . . and advanced technical advice is yours for the asking. Ask for a "no obligation" estimate!

PRECISION WINDINGS

52 Cambro Road, Clayton, Vic.

Tel. 544 7370

NEW CALL SIGNS

APRIL 1967

VK1ZDZ/T—J. F. Ingham, Station: 18 Blair St., Watson, Canberra; Postal: C/o. T.V. Station CTC7, Black Mountain.
VK2KJ/T—K. L. Finney, 1 Hill St., Baulkham Hills.
VK2RZ—V. B. Aldrich, 9 Westbourne Rd., Lindfield.
VK2ABI—T. W. Barnes, 74 Cabbage Tree Lane, Fairymeadow.
VK2AIR—A. J. Smith, 111 Northcott Rd., Seven Hills.
VK2BCW—C. H. Wall, "Lyondale," Coonamble Rd., Gilgandra.
VK2BHG—M. A. Harrison, 14 Market St., Rockdale.
VK2BKJ—K. A. Jays, 27 Grover Ave., Cromer.
VK2BMR—R. Miller, 70 Sydney St., Concord.
VK2BTK—S. King, 171 Tamar St., Ballina.
VK2BWC—A. W. H. Cox, 15 Edmund St., Lindfield.
VK2ZLQ—L. E. Peasley, 127 Byangum Rd., Murwillumbah.
VK2ZMJ—L. F. G. Miller, 47 Russel St., East Gosford.
VK2ZQD—R. L. Davis, 30 Gormly Ave., Wagga Wagga.
VK2ZWI—W. E. Dunn, 2/43 Station St., West Ryde.
VK3LJ—J. P. Baker, 16 Glendowan Rd., Mt. Waverley.
VK3AOO—J. R. Torrington, 4 Thistle St., Pascoe Vale South.
VK3ZED—P. R. Harden, 33 McComas Gr., Burwood.
VK3ZSY—R. L. Baker, 14 Davies St., Altona.
VK3ZVG/T—G. A. Cohen, 10 Lemana Cres., Mt. Waverley.
VK3ZVX—G. K. Swan, 5 Thurleigh Ave., Croydon.
VK3ZWA—G. S. Byass, Flat 14, 274 Domain Rd., South Yarra.
VK4ZDN—D. J. Abel, King's College, St. Lucia.
VK4ZJT—J. N. Thornton, 28 Edward St., Kingaroy.
VK5QD—T. N. Diviney, 6 Veronica Cres., Lockleys.
VK5ZG—L. A. France, Station: 22 Braeside Ave., Holden Hill; Postal: 209 Gover St., North Adelaide.
VK5ZEF/T—R. J. Foxwell, 129 Henley Beach Rd., Mile End.
VK5ZGJ—G. L. Johnston, 9 Pirie St., Port Pirie.
VK5ZKP—K. J. Pearce, 28 Elizabeth St., Tea Tree Gully.
VK5ZLW—L. E. Wood, Flat 9, 20 Cassie St., Collinswood.
VK5ZNW—G. F. Wheadon, 22 Selth St., Albert Park.
VK6IZ—K. Khuen-Kryk, 7 Regent Ave., Mt. Pleasant.
VK6OV—I. Gregory, 58 Upton St., St. James, Bentley.
VK6UT—T. G. Miller, Jnr., U.S. Navcomsta, North West Cape.
VK6ZBK—R. J. Howard, 53 Birdwood Ave., Como.
VK6ZCO—L. E. Cox, 16 Oxford St., South Perth.
VK6ZCW—M. P. Ryan, 8 Farris Pl., North Innaloo.
VK6ZDA—J. T. Hart, Flat 4, Squire Flats, Morriss Rd., North Innaloo.
VK6ZDF—R. T. Fisher, 48 Purslowe St., Glendalough.
VK6ZEF—R. F. Frost, Port Hotel, Carnarvon.
VK7ZA—N. L. Dittmann (Mrs.), 16 Kerry Crt., Summerdale, Launceston.
VK7ZDP—D. M. Potter, 5 Darling Pde., Mt. Stuart.
VK7ZGR—F. R. Groom, 44 Ashwater Cres., Penguin.
VK7ZPW—P. G. Waterhouse, Tarelton, via Latrobe.

☆

AMATEUR LICENCES IN U.K.

On 31st January, 1967, the number of Amateur licences in force in the United Kingdom was as follows:—

Amateur (Sound) Licences A	12,055
Amateur (Sound) Licences B	517
Amateur (Sound Mobile) Licences A	2,194
Amateur (Sound Mobile) Licences B	9
Amateur (Television) Licences	176

There were also 10,463 model control licences in force.

(Extract from "R.S.G.B. Bulletin," March '67)

Galaxy V. Mark II. SSB Transceivers **$550**
Swan SW350 SSB Transceivers **$550**
Swan SW500 de luxe SSB Transceivers **$660**
Heath HW32A 20 Metre SSB Transceiver Kits **$180**
Gonset Sidewinder 2 Metre SSB/AM/CW Transceivers **$400**
240 Volt AC Power Supply/Speaker Units, heavy duty design, matching to and for use and purchase with Galaxy and Swan Transceivers **$70**
Heath HA14 Linear Amplifiers, assembled, tested, with 1800V, etc., power supply unit **$275**
Hy-Gain fully imported Beam Antennae:
TH3JR junior tri-band, 3 el. beam **$100**
TH6DX senior tri-band, 6 el. beam **$210**
DB24A senior 20-40 M. 4 el. beam **$225**
402BA 40 Metre 2 el. beam **$150**
Newtronics 4BTV 10 to 80 M. self-supporting base-station vertical **$70**
Webster Bandspanner, all-band, complete **$50**
CDR Ham-M Antenna Rotators, heavy-duty **$180**
Coax-Baluns 500W rating, 72 ohms, for dipol. & G5RV **$10**
Crystal Filters, plug-in type, 5165-5325 Kc., with matched carrier crystals **$15**
Set of 10 FT243A Crystals, 5385 Kc. with toroid coil, etching salt and filter construction instructions **$6**
Eimac 3-400Z zero bias linear amplifier tubes **$35**
Eimac special sockets for 3-400Z tubes **$7.50**

★

Prices net cash. F.O.R. Springwood, N.S.W. Freight and postage extra.

★

Sideband Electronics Engineering
ARIE BLES
33 Plateau Road, Springwood
P.O. Box 23, Springwood, N.S.W., 2777 (postcode)
Telephone Springwood 511-394

YOUTH RADIO SCHEME

WANTED: Leaders with knowledge of Radio to lead small Y.R.S. correspondence course groups. Write Supervisor, R. Davis, VK1RD, 14 Hovea St., O'Connor, Canberra, A.C.T.

The Y.R.S. has grown steadily with activities mainly in N.S.W., Victoria and South Australia. In order to colate information the first Y.R.S. Convention was held in Sydney over the week-end of June 3. This proved to be a very fruitful event and many ideas were exchanged. One important change was made in the correspondence section which has been made a separate entity for administrative purposes and the following objectives were set down:

(a) To develop in young people an interest in radio and electronics as a vocation or as a hobby throughout life.
(b) To provide school students with a hobby activity which will reinforce their school activities in science and mathematics.
(c) To assist present and future Group Leaders of Correspondence Groups to instruct student members of such groups by providing ready-made programmes of activity.
(d) To co-ordinate the activities of all Group Leaders and to promote co-operation and interchange of ideas among Group Leaders.
(e) To give encouragement and recognition to members who attain certain specified standards of skill and knowledge in the field of radio by award of certificates.
(f) To provide all State Divisions of the Youth Radio Scheme with the facilities of an efficient and acceptable correspondence programme of study for the proposed members of the Youth Radio Scheme who are unable for some reason or other to join in the said State's Youth Radio Scheme.

Foundation office-bearers of the correspondence section are as follows: Supervisor and Secretary, Roger Davis, VK1RD; Treasurer, Miss Alison Stewart; Publicity Officer, David Jeanes, VK2BSJ; Committee: Howard Rider, VK3ZJY, the Victorian Y.R.C.S. Supervisor, and Michael Plummer, Vic. Y.R.C.S. Sec.-Treas. Enquiries re membership should go to Roger Davis, VK-1RD, 14 Hovea St., O'Connor, Canberra City.

It has been found that the Y.R.S. is becoming well known in the electronics trade and a boy who has Y.R.S. certificates, as well as his usual school qualifications, has a decided advantage when applying for a job. Also the Y.R.S. is a big help in doing the actual school work.

There are many boys who have a keen interest in radio but are not able to join a club for various reasons. This is where the correspondence course comes to the fore. Printed lessons are available for the Elementary and Junior Certificates and very shortly will also cover the Intermediate. Also, kit sets are available for some of the construction projects. All that is needed now is more leaders to look after these boys.

Actually, with the services available to a correspondence group leader he can do a tremendous amount of good for his hobby with only a little outlay of time each week. Any expenses incurred are reimbursed by the treasurer so you can see things are arranged for a leader to enable him to do a maximum of good work with a minimum of labor and accomplished at your own convenience. Therefore, drop a line to Roger asking for more details. He will welcome you with open arms and you will be richly rewarded when you see how keen the boys are.

The Convention was well attended and included Keith 2AKX, our Federal Co-ordinator, several leaders from Newcastle, Gosford and Sydney, and also Howard Rider and Mike Plummer—all the way from Victoria. This is to be an annual event with next year's meeting to be held in Victoria. On Sunday, June 4, W.I.A. headquarters at Crows Nest were taken over for the day and many students and leaders were able to meet and talk with the various officers.

A new monthly journal, called Coryra, for the correspondence section is to be issued in the future.

CLUB NEWS

VK1: Roger has a couple of volunteer correspondence course leaders from among his former students. This is a very good effort and shows appreciation on the part of the young men.

VK2: Kev. VK2ZKW, President of Maitland Y.M.C.A. Radio Club, advises that they now have 29 members and even publish their own newsletter. This is very good going as the club has only been operating since February this year. Much work has been done on the club rooms and the workshop has now been completed so members can get practical experience for their various certificates. The club intends to build its own radio gear which should create a lot of interest for some time. I think we can expect a nice sprinkling of new Hams from here in the future.

VK3: There are two new member clubs—Moorabbin Technical School with Mr. L. Taplin as Club Leader and Kingswood College Y.R.C. with Roland Roper as Club Leader. We will look for more news from this quarter later on.

Gowrie Park State School Y.R.C. has members studying for the Elementary, Junior, Intermediate and Senior Certificates with boys from Grade 6 and up. The club has a 50w. transmitter which is used for teaching operating procedure under the guiding hand of a licensed operator.

A.P.I. Radio Club, P.M.G. Technicians School: Dave VK3ZMX recently paid a visit to Scotch College Radio Club with his mobile 2 metre f.m. gear. The boys worked a bit of 2 mx DX and had a good time doing so. A 10 el. 2 mx beam is being built at the A.P.I. Club so the boys are getting a lot of practical experience by putting their theory to work. A contact has been made on the present aerial with Harcourt, which is a haul of about 70 miles.

VK5: Port Pirie Y.R.C. has two more successful Elementary candidates. Elizabeth Amateur R.C. has been very successful with its first sitting for the Elementary with six passing. There are also a few adults doing the Elementary and so far three out of four have passed. Welcome to another new club at Gladstone High School under the direction of Bob Stunell and starting with a good membership of 20.

Many thanks for all the news sent. Please keep it up. Address: Mrs. M. Swinton, VK-2AXS, P.O. Box 1, Kulnura, N.S.W. 73, Mona.

☆

1966 "CQ" W.W. CONTEST
VK Results

Phone— Call	Band	Total Points	Contacts	Zon. Wkd.	C'tries Wkd.
*VK2WD	A	35,088	138	35	51
*VK2FU	28	17,605	172	14	21
*VK2APK	14	147,864	432	33	89
*VK3ZR	A	61,722	195	50	77
VK3XB	A	7,728	49	25	31
*VK3ABA	21	22,001	162	20	29
VK3LW	14	2,940	29	12	23
*VK4CK	A	17,145	129	17	28
*VK4SD	14	70,560	219	34	78
VK4DO	14	4,114	51	12	22
*VK5LC/5	14	3,157	31	17	24
*VK6RU	A	660,393	902	88	175
*VK6XX	28	12,384	90	16	32
*VK7SM	A	31,341	140	41	52
*VK9DR	A	8,460	63	22	55
All the above were single operator stations.					
VK9XI	—	149,640	440	45	75
This was a multi-operator station.					

C.W.— Call	Band	Total Points	Contacts	Zon. Wkd.	C'tries Wkd.
*VK2EO	A	530,640	884	75	126
VK2GW	A	203,000	500	62	78
VK2PV	A	117,852	295	59	79
VK2RA	A	1,350	19	12	13
*VK2BKM	28	32,040	242	19	26
VK2QK	21	7,449	67	15	24
*VK2APK	14	114,837	402	30	71
*VK3AXK	A	154,845	481	46	65
VK3XB	A	6,410	51	21	25
VK3ABR	A	3,432	56	12	10
*VK3RJ	28	7,424	90	14	15
*VK3ADB	7	84,456	435	22	46
VK3APN	7	31,161	224	16	31
VK3OP	7	5,712	112	9	8
VK4UC	14	2,592	36	12	15
*VK4SS	7	8,700	103	14	15
*VK5KO	A	2,730	33	17	13
*VK5WC	14	6,358	70	15	19
VK5RX	14	798	14	8	11
*VK7SM	A	308,967	589	69	112
All the above were single operator stations.					

* Certificate winners.

Single Band Leaders (Oceania only)

Phone—			
28 Mc.	VK2FU	17,605	points
21 ,,	ZL1AGO	95,680	,,
14 ,,	KW6EJ	375,193	,,
7 ,,	——		
3.5 ,,	KH6EPW	5,040	,,
1.8 ,,	——		
C.W.—			
28 Mc.	VK2BKM	32,040	points
21 ,,	K6CAA/KH6	50,032	,,
14 ,,	VK2APK	114,837	,,
7 ,,	VK3ADB	84,456	,,
3.5 ,,	KH6EPW	7,068	,,
1.8 ,,	——		

13th W.A.E. DX CONTEST, 1967

PRECIS OF RULES

Period: C.W.—0000 hours GMT 12th August to 2400 hours GMT 13th August. **Phone**—0000 hours GMT 9th September to 2400 hours GMT 10th September. N.B.: A minimum operating time of four hours is required to be eligible for an award.

Bands: 3.5, 7, 14, 21 and 28 Mc.

Calls: Non-Europeans "CQ WAE de . . ." or "WAE de . . ." Europeans "Test de . . ." or "DX de . . ."

Objects: For European and non-European stations to contact one another. (N.B.: UF, UG and UD are in Asia.) This is allowed once per band except for QTC traffic.

Cyphers: (a) A control number consisting of RS(T) report and three numbers representing the QSO must be exchanged for a valid QSO. (b) A QTC may be passed to a European by a non-European only. It consists of the time, call and QSO number of a previous contact.

Scoring: (a) For each complete exchange of control numbers, 1 point. (b) For each QTC transmitted and acknowledged, 1 point. Up to 10 QTCs may be passed to the same station per band. (c) Multiplier. Each European call area counts one country point per band. The addition of all countries on all bands gives the total multiplier.

Final Score: All contact points plus QTC points, if any, multiplied by the total multiplier [(c) of previous para.].

Entry Classification: (a) Class A, up to 50w. input. Class B, 51 to 150w. input. Class C, more than 150w. input. If not stated, logs will be graded in Class C. (b) Single operator station. Multi operator station.

Awards: (a) Winner in each continental area. (b) Further awards to the highest scorers in classes A, B and C—if the participation warrants.

Logs to be postmarked not later than 15th September 1967 (c.w.) or 15th October 1967 (phone) and addressed to: Dr. H. G. Todt, Chlodwigstr 5, 1 Berlin 42, Germany.

☆

Publications Committee Reports

As the June meeting was held so late in the month it was not possible to report on this meeting in the July issue. Correspondence was received from VKs 4SS, 4NZ, 3AKZ, 3ABP, 3ZVI, 2ZRD and 2ZPC. Technical articles were received from VKs 3AMK, 2ZEL, 6XY, 2AMA, 2PY, 2TG and 5WD.

Considerable time was devoted to the next issue of the Call Book and various suggestions given consideration. All Divisions have been written to and asked to bring Divisional information up to date.

Among suggestions considered was one that a number of prominent radio clubs be invited to supply information for inclusion, to enable country and interstate travellers to have a ready reference of "who and where". It was decided to write for this information.

The Call Book will include additions and alterations up to and including the May list issued by the P.M.G's Department. No amendments or new calls after this list can be included in the 1967 issue.

Some changes were agreed upon regarding the lay-out of "Amateur Radio", the most important being the re-location of "Federal Comment". With the growing importance of Federal matters it was felt that more prominence and space should be made available as from this, the August issue.

It was noted that notes correspondents are tending to submit material in forms other than that outlined in previous issues of "A.R." and those concerned are asked to go back over previous issues to ensure they are complying with the requirements of the committee.

As the July meeting of the committee was devoted to the checking of the proofs of the Call Book time was not available to handle any other business. This report is therefore restricted to listing the correspondence and technical articles received. Correspondence received from VKs 2ZHJ, 3LM, 5ZMT, 4NK, 5JT, 2NA, 5OD, 1QL, 3IC, 3ANR, 2ZIF, 6AG and W. Jehns. Technical articles were received from VKs 3ZRX, 4AT and 1AU.

PREDICTION CHARTS FOR AUGUST 1967

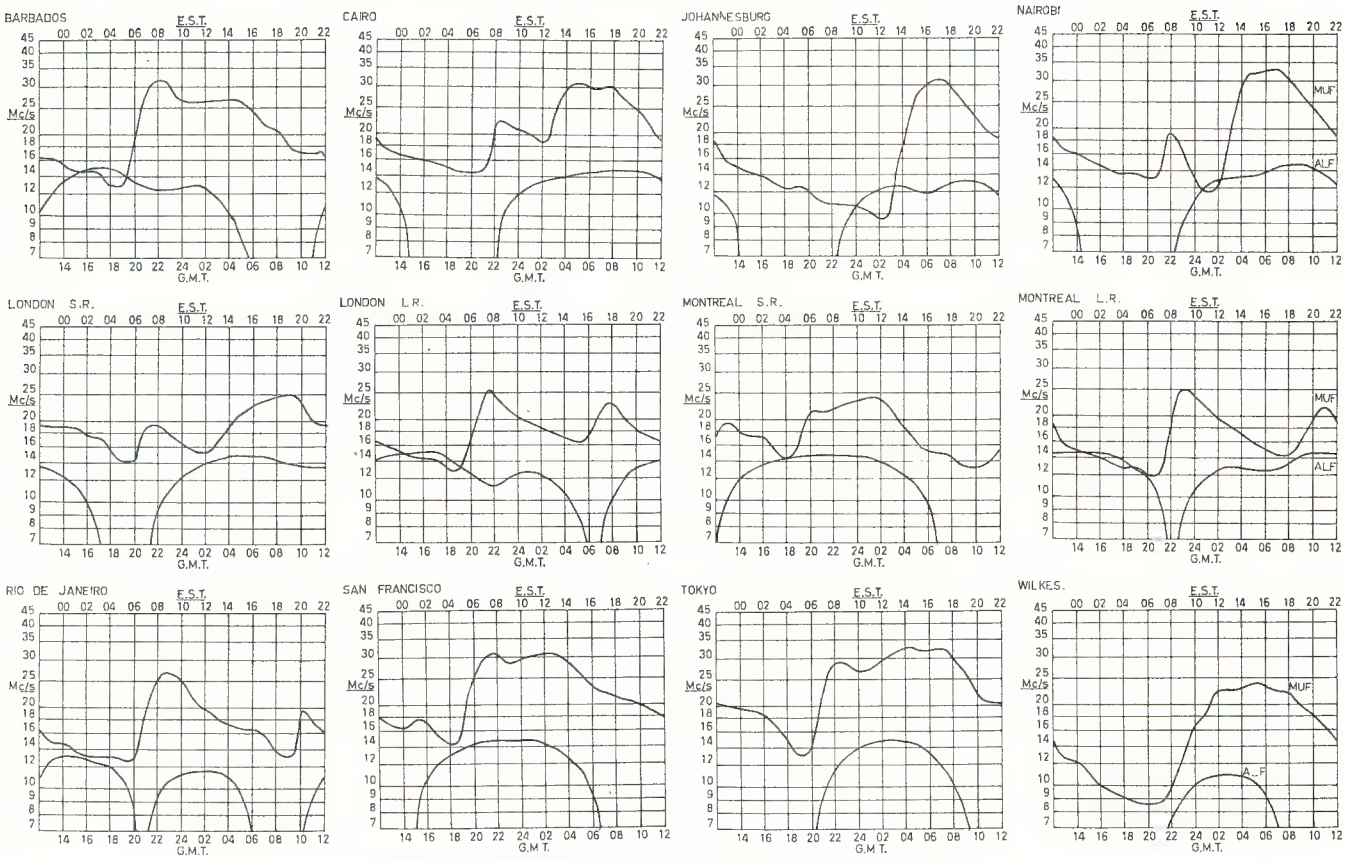

(Prediction Charts by courtesy of Ionospheric Prediction Service)

JUST ARRIVED— **NEW 1967 EDITIONS!**

★ THE RADIO AMATEUR'S HANDBOOK

The standard reference work and text for everyone—Hams, Experimenters, Students, Engineers, Lab. Men, Technicians.

BY A.R.R.L. PRICE **$6.10** posted

★ THE RADIO HANDBOOK–17th Edition

Tells how to design, build and operate the latest types of Amateur Transmitters, Receivers, Transceivers and Amplifiers.

BY ORR PRICE **$13.45** posted

ALSO AVAILABLE—

★ THE RADIO TRANSISTOR HANDBOOK

This up-to-date Handbook covers a wide range of communication for both Amateur Radio and Commercial Applications.

BY STONER & EARNSHAW PRICE **$6.65** posted

McGILL'S AUTHORISED NEWSAGENCY

Established 1860 **183-185 ELIZABETH STREET, MELBOURNE, C.1, VIC.**

"The G.P.O. is opposite" **Phones 60-1475-6-7**

DX

Sub-Editor: ALAN SHAWSMITH, VK4SS
35 Whynot St., West End, Brisbane, Qld.

By the time this reaches your mail box conditions may have begun to stir from their winter somnolence. Great expectations are held for this spring. It is to be hoped that your gear is in "go" order.

Fifteen metres has held up rather well. Here it has signals on it all day long from divers places. Not too much rare stuff but more will begin to use this good band.

Listening on 7 Mc. around 0900z and later a few South Americans have been weakly workable but this band is now but a shadow of its former self because most DX has vacated it, for less QRM'ed pastures.

NOTES AND NEWS

Willis Island: VK4HG will commence operation from this bird infested coral strip on or about 25/6/67 and will continue until early December. This should be more than enough time for everyone to make a QSO. Mode and band will be 14 s.s.b. mainly, but other bands will be used. Operator is John Hamilton, 37 Byfield Street, Reservoir, Vic., ex VK3AYH. Send all QSLs via the VK3 Bureau. John will attend to them when he returns. He will be using a Yaesu FL50.

Fr. Guiana: FY7YG 14200 2100z. QSL W2CTN.

Cuba: CO2FA 14200 0000z. (LIDXA)

Monaco: 3A2BY 14037 2040, and 3A2AV 14056 2400z. (LIDXA)

Gambia: New operator now on from here. ZD3G 14185 0300z.

Mauritius: VQ8CG 14214 1200z.

Tonga: VR5RZ ex VK4RZ is active s.s.b. 14 Mc. Listen around 14200 at 0300z.

Maldives: Still being kept on the DX map by VS9MB 21042 1500z. (LIDXA)

Turkey: Latest from here is TA2OB 14030 2310z. (LIDXA)

Martinique: FM7WO is active and his QSL manager is WB2SSK. Listen daily 2000z and 0100z 14 c.w./a.m. operation.

Mongolia: JT2AA has been workable here on 7 Mc. 0900z and later; low end.

Greenland: OX4AA 14232 0500z. QSL via K8REG.

Galapagos: HC8JG 0440z 14206.

Tristan de Cunha: ZD9BI 14256 1700z. Mostly week-ends. QSL W2GHK.

Ivory Coast: TU2BA 14220 2030z. (LIDXA)

Sth. Georgia: Dave VP8IE now said to have s.s.b. gear. Very active.

Bear Is.: EI0BI 21400 1500z. QSL EI2AW. (LIDXA)

Nepal: Father Moran works transceive on 14123 1100z.

Canary Is.: EA8CB 14220 2044z. Big sig. here.

Somali: 6O1GB 14208 2115z. QSL American Embassy, Dept. of State, Washington, D.C.

Wallis Is.: FW8RC reported 14240 0600z, but heard here 21040 0630z.

Sudan: Remember ST2AR? He gave many VKs their first ST QSO. Now active again 14020 2100z.

Malawi: 7Q7EC 14228 1140z. (LIDXA)

San Andre: HK0AI still QRV on 14 s.s.b. Sometimes around 0400z and later.

Comoros: FH8CD 14200 1130z. Also sometimes at 0300z. (LIDXA)

Egypt: SU1AR 14018 2300z. (G3UGT)

Sao Thome: CR5SP still at it on 14195 1600z. CR5CA 21065 2045z.

Sikkim: AC3PT 21030 1100z. (G3UGT)

St. Helena: ZD7KH 14195 1830z. QSL 860 Atlantic St., Lindhurst, L.I., N.Y. (G3UGT)

Saipan Is.: KG6SL 14300 1100z. QSL W4FRO. (G3UGT)

Much of the following is by courtesy of ZL2AFZ, Geo. Studd, DX Editor for "Break-In" magazine in ZL. This news is received on the usual exchange arrangement.

Expo VE: Station operating from here is VE2XPO. 14014 1632z.

Ceylon: 4S7EC 14043 1600z. 4S7NG 21015 0800z. 4S7PB 14140 1800z.

C.A.R.: Herman TJ8QQ now has permits to operate from here and Gabon and later Tchad. He will be TL8QQ, TR8QQ, TT8QQ. QSL to W4DQS. Gear will be s.s.b. and 3 el. beam. Other activity from C.A.R. is reported also.

Mauritius: Steve VQ8CC ex ZC4AK QRV 14055 1430z. QSL direct to P.O. Box 14, Curepipe.

Malawi, Tromelin and Geyser: CR7GF will be the man behind calls from these rare ones. Keep listening. QSL W4VPD with s.a.s.e. or SAE/IRC.

Keremeoecs: ZL1AI still going on 14260 a.m. from 0300z. Rumoured that he will be QRT soon and go to Br. Phoenix as VR1B with better gear.

South Orkneys: VP8JD 14127 asks that his QSLs go via CX2AM.

Scientific Studies Committee: This group is asking for reports on the Propagation Research Beacon on 28983. There is also a beacon on 50 and 70 Mc. Info to R.S.G.B. Hdq., 28 Little Russell St., London, W.C.1.

Sunspot Predictions: August 104, Sept. 108. (ZL2AFZ)

Virgin Is.: KV4AA, Dick Spencley, now reported back on the air. 14075 1100z. (VK4UC)

Bermuda: WB2PXZ/VP9 and WA8SVU/VP9 both QRV 14 c.w. 0700z. QSL Bureau. (VK4UC)

Rarotonga, Cook Is., Group: ZK1CI is about to be active from here and will use bands 80 through 15 mx. His duration of stay will be three years. One of the QRP gang, so keep an ear out for him. QTH, P.O. Box 103, Rarotonga, Cook Is. (VK5BS)

ACTIVITIES

Harry VK8HA reports 28 Mc. now poor but did work these on the last solar flare: UW0SX, UF6DZ, 4Z4AG, OK3DG, YO6AJF, KA9AK, MP4BEU, UV3AAM, ZL2AUM, UW4IB, ZS6D, 9J2MX, UT5LB, ZS6BMH, UA6RBT, 9J2WH, VS9MB, IS1FIC plus loads of Js and Ws. On 21 Harry reports his best catch for the month was 4U1ITI. The band has been open but not much rare stuff heard up there in Darwin. On 14 Mc.: 6W8DD, HP1BR, VE3CQB, SP8YA, VU2TS, I1YS, 6W8CQ, UJ8AC, KR6MB, G3OHG, ON5ZO, OZ5DP, PA0DV, HB9ADO, VQ8CC, PY1BYK, OK3KGI, UA1SP, UY5XQ, OK1FF, UN1CF, F9OB, OZ4FF, etc. (Nice list, OM.)

Dud VK4MY not on much but did manage EL8B as his best on 14 for the month. These goodies were heard: ZD3IZ 14050 0745z, GC8HT 14180 0700z, FG7TE 14030 0615, 6W8DD 14050 0740, 5U7AC 14110 0700z, 6W8DX 14110 0700z, ZL1AI 14250 0630z, EA8ET 7020 0645z, 5W1AA and VR5RZ (ex VK4RZ) 14135 0700.

Ken VK3TL reports bed as better than chasing DX these cold nights. However these were logged: CR4BC, CR6BX, EL7B, ZD3I, ZD7DI, 5N2AAX, 5U7AC, 9G1BF, 9Q5CZ. All on 20 mx. Best QSLs received were PI1J, VP2AZ, VQ9AA/D, VQ9AA/F, FH8GF, 5Z4SS, CP3CN, CR6BX, FR7ZN, 5T5KG, ZD3I, ZS8L, FB8YY. QTH of EL8B is via SM5MC. 5N2AAX P.O.B. 3380, Lagos. (Thanks Ken.)

Trev VK2NS has sent in a very interesting letter. Most will know that Trev is an active 7 Mc. DXer with a score of 180 worked on this band. He writes to record a Marathon Activity. 1000 QSOs with WA6UNF since 17/5/63. Only on two occasions were the skeds not made. This was due to Ed. WA6UNF falling asleep on the job. As the QSOs were made always at 0800z, this meant that Ed. was mostly up till midnight. (No wonder he fell asleep occasionally.) Freq. was on 7023 and usually established with a 1 x 1 call. The 1000th QSO took place on 21/6/67. This is quite a feat when it must be remembered that Trev is a QRP man, relatively speaking.

Trev also supplies some information about the O.O.T.C.—the Old, Old Timers' Club. For membership you must have held a Ham ticket for 40 years. This puts one into select company. A few in U.S.A. are Barry Goldwater, Gus Browning, Col Elser, H. Hoover (all famous names). VK members are VK4VR, VK-5JT, VK2NS. More information will be given on this later but in the meantime a letter to Trev VK2NS will bring all the dope you want.

Chas. VK4UC not very active this month. Conditions on 20 were down this past week or two. His c.w. score is as follows: TI2PZ 1300z, XE2IH 0900z, WA8SVU/VP9 0600z, 9H1AE 0640z, FW8RC 0800z, G8JR 0600z, CO3CW 0600z, YU1NOH 0600z, F9VN/FC 0615z, 9J2MX 0600z, FB8YY 0530z, HA3MB 0600z. Worked on 15 c.w.: VU2DIA 1200z, WH6GEQ 0100z, 9V1MS 0300z, HM1BW 0600z, CO2BB 0300z.

SOME QTHs

5R8AM—K2KTK.
5R8AS—W6ZPS.
5R8AX—TG9EP.
5R8AZ—G3TTG.
TU2BQ—P.O. Box 1617, Abidjan.
HC8FN—WA2WUV.
9Q5SR—W1BPM.
9U5DP—W2NSM.
GD6UW, GD3VBL, ZD9BH, VP8IE—All via P.O. Box 7388, Newark, N.J., 07107.
GB2DSF—W3WAO.
(All by courtesy of ZL2AFZ.)
CM2WS—Box 6996, Havana.
5N2APD—C/o. 6 Gelford Close, Worthing, Sussex, England.
8R1S—P.O. Box 739, Georgetown.
FM7WO—WB2SSB.
WB2PXZ/VP9—via VP9 Buro.
KJ6BZ—Box 937, Detachment 1, 1957 Command Group, A.P.O., S.F. 96305.
TL8DL—American Embassy, P.O. Box 924, Bangni, C.A.R.
ZD9BH—GB2SM, Science Museum, London, U.K.
VR1Q—G3NMH.

AWARDS

W.A.J.A.—Worked All Japan Prefectures

This award is not easy to obtain. There are 46 prefectures in JA. (A list of same can be had by sending a s.a.s.e. with one I.R.C. to QTH below.) All contacts must be made after 1/8/52. Any mode or band may be used. QSOs must be with National J stations only. Application and QSL cards must be sent to Overseas Committee, J.A.R.L., P.O. Box 377, Tokyo, Japan.

My thanks again to all the contributors and the many helpful letters. 73, Al VK4SS.

— . . . —

DX'ER OF THE MONTH

Meet Rod Champness, VK0CR, who is at present very active from Macquarie Island, Antarctica. His home call is VK3UG. Rod is in big demand as a rare one. He operates mainly between 14150-14180 after 0700z. However, he uses other bands and has been on 28610 when conditions permit. QSL cards go to G. Johnston, Inglis St., Newtown, Hobart, Tasmania. Rod has installed a beacon at Macquarie Island on 52.9 Mc. Reports on this would be valued greatly. Give him a buzz. All VKs are gladly worked but please exercise care and do not interfere with Rod's daily skeds on 20 or 10. Any further info on Rod's activities can be had from his good XYL Deirdre, C/o. T. E. Reville, Garfield North Road, Garfield, Vic. The above photograph was taken in the shack on Macquarie Island. (That's a man-sized traditional beard, Rod.—Al.)

W.I.A. D.X.C.C.

Listed below are the highest twelve members in each section. Position in the list is determined by the first number shown. The first number represents the participant's total countries less any credits given for deleted countries. The second number shown represents the total D.X.C.C. credits given, including deleted countries. Where totals are the same, listings will be alphabetical by call sign.

Credits for new members and those whose totals have been amended are also shown.

PHONE

VK5MS	316/337	VK4HR	281/297
VK3AHO	314/326	VK4FJ	279/296
VK6MK	303/320	VK3TL	259/263
VK6RU	303/326	VK2AAK	246/250
VK5AB	300/314	VK4TY	243/244
VK2JZ	285/300	VK2APK	234/237

C.W.

VK2QL	295/315	VK3NC	266/286
VK2ADE	291/313	VK3ARX	262/270
VK3CX	291/312	VK6RU	258/279
VK4FJ	291/313	VK4HR	256/278
VK2AGH	282/295	VK3YL	251/268
VK2AHQ	281/293	VK3XB	249/252

OPEN

VK2AGH	311/329	VK4HR	296/318
VK6RU	307/330	VK2EO	295/316
VK2ADE	305/329	VK4TY	286/298
VK6MK	305/322	VK3TL	279/283
VK2VN	300/315	VK2ACX	276/300
VK4FJ	296/318	VK3ARX	276/284

SWL

Sub-Editor: D. GRANTLEY, WIA-L2022
P.O. Box 222, Penrith, N.S.W.

Following the comments I have made in recent issues of "A.R." on the elementary facts of Short Wave Listening, and equipment, we continue this month to mention ways and means of improving reception results from a basic receiver design. In passing, I would like to thank those who have commented favourably on these introductory notes, which are designed solely for the beginner.

Last month I mentioned the use of a basic receiver, such as the wartime communications receivers, which in many cases had only one r.f. stage. While this will give fairly good results, it is necessary to have another r.f. stage in order to hear those low power stations which are buried at times under a mass of screaming signals. This piece of equipment is quite easy to build, in fact it is a project which, using a pre-wound coil, could be completed at a group construction night.

Several years ago, I built one designed by VK5AX and published in "A.R." many years ago, Sept. 1957 I think. This used a home wound coil, broadcast condenser, two 6AC7 tubes and a few minor bits and pieces. Power was obtained from the receiver power supply and the whole unit built on a 4 x 3 inch chassis. The difference this unit made to three receivers—AR7, CR100 and a No. 19—had to be heard to be believed. Another popular unit uses a single 6AK5, whilst a transistorised version came to my notice recently. These units cover a frequency range from around 2 to 30 Mc.

To extend the frequency range of a receiver such as a No. 19, which tunes from 2 to 10 Mc., a converter is used. This is a simple device which, when connected between the antenna and the antenna terminal of the station receiver, increases the range of the latter, as well as improving the performance of full h.f. coverage receivers in their higher frequencies. The converter is virtually the front end of a standard communications receiver and is of two types. The tunable converter feeds into a communications receiver which is tuned to say 2 Mc., the tuning is then done on the dial of the converter. The fixed tuned type is coupled to the receiver, which is tuned in the normal manner.

Technical explanations for these can be found in any standard handbook, as well as a variety of circuits and designs which space does not permit me to go into here. But regardless of the improvements which we can make to our receiver, there are two factors which control the final results. The antenna used and the ability of the operator. Operating is a specialised field and I am at present trying to get one of our best known operators to cover this for us. The antenna, however, I will try to cover here.

The most important feature of any antenna is height. Again I refer any beginner to a reliable handbook. I will comment only on the types of antenna I have personally used, or have been associated with. There are two types of antenna, the fixed or long wire type in its various forms, or the rotatable beam similar to the t.v. antenna, but designed for Amateur frequencies. The latter is turned by means of a motor or by hand, until it faces the direction of maximum signal and at the same time it reduces the strength of signals coming from other areas, thus giving a better readability to the desired signal.

The cubical quad is by far the best of the turnable beams and is not over hard to construct. Many of our top DX stations use this beam as their transmitting antenna and Rod de Balfour, one of our leading S.w.l's of 10 years ago had remarkable results in the receiving field with a quad. Yagi type beams are used extensively on v.h.f., but become somewhat large on the lower frequencies. A ground plane is almost useless when compared to other types of fixed antenna. If a large area is available, the vee beam and rhombic are outstanding. I used a vee beam from 1957 to 1960 when operating from the Riverina. This one had 200 feet legs and was pointed on Europe over Central America. The results are well known and for what it's worth, I have just erected a similar one at this QTH, however the legs are only 130 feet long.

Any form of long wire will give good reception, but height rather than direction is the predominant factor, from my experience N.W. to S.E. seems to be the ideal direction. Pages could be written on this subject from the theoretical angle, but in actual practice get your antenna high and away from any source of possible electrical interference.

NEW SOUTH WALES

No report of the June meeting has been made available to the publicity officer, Mac Hilliard, who was unable to get to the meeting. QSL officer reports that all cards received have been despatched to their addressees and wishes to remind VK members that if you are likely to be getting cards returned through the VK Bureau, please use your official WIA number, or an ISWL call if you have one. Both are easily identified, but some of the weird and wonderful s.w.l. prefixes which come to light will never be identified if the listener persists in using a prefix from other societies.

An unexpected and very welcome piece of publicity for the Group was obtained when I was interviewed by the magazine staff of the Postal Institute. The gear and a display of cards and awards were set up at the Penrith Post Office, and photographs taken for inclusion. I have been requested to write an article outlining s.w.l. activities in relation to Amateur activity, and this is being undertaken at the moment.

VICTORIA

From Ian Woodman comes news that the cold weather seems to be affecting Group meetings. "Numbers are dropping below the 30 mark. Remember the room heaters fellows, and turn up at the meetings." The Group wishes to thank Harold Hepburn, Geoff Thompson and other persons for the three separate groups of radio parts donated to the younger members. Things are moving in the planning for the R.D. Contest and I believe WIA-L3100, the general listening section, and WIA-L3333, the DX section, have challenged one another, and the other States as well. It should be interesting to see the results. It will be an interesting Contest this year with George Allen over in VK6 and possibly Ernie Luff joining in the fray, and WIA-L2022 with gear on all bands to 2 metres, plus a vee beam and over 2000 ft. of altitude. It would appear that the VK3 Groups would want to be on their toes.

DX NEWS

The following are new members of the ISWL, and can be QSL'ed via their bureau: K6EVR, K0CGE, DL5YG, WB2QKG and WB-2TYR. JT1AG is on 14 c.w., whilst UA1CK was to have made a trip to JT in April, signing JT1JT or UA1CK/JT1. I have heard nothing of him but understand QSLs were to go via Box 88, Moscow, or Box 939, Ulan Bator. Looking for EA9? Try EA9EJ on 21200 a.m. at 1800z (yes 15 is often open then) or 14124 s.s.b. Watch FR7ZL, he is all over the place with some good spots such as Juan de Nova and Europe. 5T5KG was Lloyd and Iris who were listed for TZ and ZD3. QSL via Yasme, Box 2025, Castro Valley, California 94546, U.S.A. Certain QSL, ZD7KH, heard at good strength here in VK2 on June 26. Says QSL via K2HVN. HC8FN via WA2WUV. K2HML/MM says QSL via JA1EZL.

POSTAL DIRECTIONS

July ushered in the new postcode system in Australia. This will be a milestone in postal history and one which is of the greatest importance to anybody who uses the mails as frequently as an s.w.l. in pursuit of QSLs. There are two major points, firstly include the code number of the town to which the letter or card is being sent, secondly, include your own postcode in all communications. All letters to my QTH should include the number 2750. It is most important that no metal objects such as pins, be enclosed, as these tend to tear as well as interfere with the decoders.

AROUND THE SHACKS

Ernie Luff, with a score of 217/141, is climbing rapidly up the ladder and at the same time trying to add to his list of awards. Best loggings of late were 9Y4AR, VP1LB, VP1SB, VQ1FB, VP2SAB, and K0OXV/CE0A. Inward cards: W7QPK, UA3KBO, UO5PK, DJ8FC, DL8DX, UA3DR, DJ3QX, UA0NM, UA1JG, YU2NFJ, YO3AFT, UA1CK, VK8DI, PJ2MI, VK5RO, VR2FC, VR2FF, K1BRE, VE2ANK, VK5DS, ZB2AX, CR6GO, DL6EZA, DJ9GD, DL9NF, DJ3GG, I1TRA, FL8RA, VE7BMC, UA8KHW, I1LAG, I1CZE, XE1EH and ZS1JH.

Bob Mutton down in VK7 has inward QSLs from K8HUX, CR6CQ, UL7BG, JA1KHK, VK-2AVA/LH, PY1NBF, taking his score along to 118/81.

Over to VK6 and once again I was very pleased to hear from George Allen, WIA-L6043, and to hear of his doings on the lower bands. I have always maintained that there are plenty of calls to be heard on 80 mx c.w. and recent reports from Eric match up very well with the list George has mentioned. DJ-9CF, HA1KSA, UA1DCA, UA1KUQ, and UA-3LS were logged on 80, but to go one better, George has been looking at 160 metres. Now I often look at this band, but as yet I have heard very little other than VK5KO and VK-3AWI. Not so George, have a look at this lot, remembering that L6043 is an experienced telegraphist and has the advantage of being in VK6. His loggings on top band are: G3IGW, GW3OAY, OL4AFI, OK1WT, OL5AD, OK2KGV, OK1AES, DL1FF, 9V1LP and VK5KO.

Here in VK2 things are not so hot DX wise, 10 mx has fallen away although quite a bit of DX remains on 15 if you can get through the JA QRM. Strangely enough, 20 has been somewhat patchy, although despite comments on the air from VKs that the band was poor. I managed to fill two pages of log this afternoon with such calls as YO8DD, UW6, KL7, PY1CLI, TJ1QQ/AM, UO5GN, CT1DJ, VK0, VE, I1 and most of the normal Europeans as well as Pacific and South American stations. These between about 4 and 5 p.m. local time. FM7WD and ZD7RH were heard here a few days ago. Inward QSLs here were CO2JB, 9X5PS and at long last KG6IF, taking the score to 304/169.

All the best in the R.D. and on the DX front. 73, Don WIA-L2022.

DURALUMIN, ALUMINIUM ALLOY TUBING

IDEAL FOR BEAM AERIALS AND T.V.

★ LIGHT ★ STRONG ★ NON-CORROSIVE

STOCKS NOW AVAILABLE FOR IMMEDIATE DELIVERY

ALL DIAMETERS—¼" TO 3"

Price List on Request

STOCKISTS OF SHEETS—ALL SIZES AND GAUGES

GUNNERSEN ALLEN METALS PTY. LTD.

SALMON STREET,
PORT MELBOURNE, VIC.
Phone: 64-3351 (10 lines)
Telegrams: "Metals," Melb.

HANSON ROAD,
WINGFIELD, S.A.
Phone: 45-6021 (4 lines)
Telegrams: "Metals," Adel.

FEDERAL AND DIVISIONAL MONTHLY NEWS REPORTS

(SEND CORRESPONDENCE DIRECT TO DIVISIONAL REPORTER NAMED AT PARA. END)

FEDERAL

RATIFICATION OF FEDERAL COUNCILLOR'S VOTE

In addition to Divisions previously mentioned, written indication has also been received from VK5 and VK7 as to ratification of their Federal Councillor's vote. The VK2 Federal Councillor indicated verbally on the 3675 Kc. sked on 25/6/67 at 2200 hours that his Division has also ratified his vote on all motions.

CONSTITUTIONAL MATTERS

(a) No Division has indicated opposition to changing clause of 1967 1.4 to read:

Times 41: "The date and time prior to which completed voting papers must be received at the office of the Institute in order to be counted shall not in any case be **less than 28 days nor more than 40 days** from the date on which voting papers are sent to members."

Accordingly that clause is so amended in accord with 1966 motion 1.3.1

(b) The above action was taken at the request of VK4 Division who have indicated through their Federal Councillor that they will ratify the constitutional items once the above point is cleared up.

(c) It is apparent therefore that the discussions over the past five Conventions have at last come to a satisfactory conclusion, and it now only awaits formal ratification from VK2 and VK4 for Executive to initiate the moves to produce the final form of the W.I.A. Federal Constitution, in accord with the arrangements agreed to in Hobart and previous Conventions. Executive extends its congratulations to all Divisions on this very pleasing result.

BROADCASTING STATIONS

The Australian Broadcasting Control Board has informed us of the following additions to the list of Broadcasting Stations:

Kc.	Station
560	4AM, Atherton Tablelands Area.
530	4KZ, Innisfail-Tully Area.
1200	4GG, Gold Coast Area.

These stations are not yet in operation.

AUSTRALIS

Mr. Richard Tonkin has contacted the Federal Secretary on his return from U.S.A. He thanked the W.I.A. for its initial sponsorship of the project and stated that Oscar is very happy with the package. Due to the delayed departure of the package, it was given time to be put in "go" condition by Les Jenkins, VK3ZBJ, and others. It was unfortunately not possible to arrange free transit, so Executive agreed to pay the freight after they were satisfied it had been rendered technically satisfactory.

AMENDED INWARD QSL BUREAU ADDRESSES

VK3 QSL Bureau: Mr. E. Trebilcock, 340 Gillies Street, Thornbury, Vic.

VK5 QSL Bureau: Mr. Geo. Luxon, VK5RX, 27 Belair Road, Torrens Park, South Aust.

— • • • —

FEDERAL QSL BUREAU

Ken Cantrell, K1OTA advises: Plans for a DX-pedition are now final. I will be operating from Luxembourg with the call K1OTA/P/LX from July 25 to August 4, 1967. Operating frequencies will be—c.w.: 28.015, 21.015 and 14.015 (main operation here), 7.015; s.s.b.: 28.65, 21.35, 14.2. And from Gibraltar with a ZB2 call on the same frequencies as above from August 5 to August 15. QSL via home QTH: 36 Pembroke Street, Quincy, Massachusetts, 02169, U.S.A.

FR7ZG advises there is no QSL manager in Reunion Island. All QSLs should go direct or via R.E.F.

OK1KBN writes that their club station OK5TOL will be active from Chudrim City from 13th to 26th July on all bands, from 160 to 10 metres. They solicit QSLs to Box B22, Pardubice, Czechoslovakia.

Stuart Meyer, W2GHK, manager of the DX-pedition of the month, for several years, has forwarded a comprehensive list of all the logs held for past expeditions. Details from this Bureau.

Although it appears a little too soon to expect a large drop in the volume of cards through the Federal Bureau, the total for June showed a 50 per cent. reduction to 6,000.

—Ray Jones, VK3RJ, Manager.

— • • • —

NEW SOUTH WALES

SPECIAL GENERAL MEETING

On Friday, 23rd June, the Special General Meeting of the N.S.W. Division was held. This meeting was the one notified to all members in the mailed circular. The business to be dealt with was:

1. To hear a report of the Auditor on the financial ability of the Division to employ a Secretary.
2. To hear a statement on the legal obligations and powers of Council.
3. To consider a motion of confidence in Council.

The meeting was opened at 8.10 p.m. by the President K. Finney, VK2KJ. The delay in opening the meeting was caused by the best attended meeting at Wireless Institute Centre for many years. Seating accommodation was quickly filled and conservative estimates placed the attendance at some one hundred and fifty.

Members came from many country centres, and some well known Amateurs from the Hunter Branch, the Canberra Radio Society, Orange Radio Club, Nepean Radio Club, and the newly formed Illawarra Branch were present. The questions to be discussed were, judged by the attendance, of considerable importance and the writer suggests that the future of the Division would ultimately depend on the outcome of this meeting.

The President in a brief statement said that the meeting would be conducted according to the notice paper and then had the minute secretary, Warwick Johnstone, read out to the meeting the three questions to be discussed as given on the notice. Following the reading of the notice, the President then called on the Auditor to proceed with the financial statement. However, the Auditor had been delayed and was not available. This being the case, the proceedings were temporarily halted and the presentation of a prize took place.

Following the prize giving, the Auditor still had not arrived so the President (chairman) arranged for the legal officer, Mr. Clark, to give a report on item 2 of the notice. Mr. Clark commenced by saying that he would speak on the aspect of hiring a Secretary and the legal position of doing so. He emphasised that he was speaking as a legal man and not as a member. Mr. Clark said that the award for Secretary was a salary of $36 per 40-hour week of office hours 9 to 5. Work carried out at meetings and on Saturday requirements would be subject to various penalty rates. Provision would have to be made for one week sick leave and three weeks annual leave. Workers' compensation insurance and public risk insurances would be required and after five years' employment of staff long service leave would have to be provided for. Mr. Clark went on to say that from a legal point of view no problems should occur, and the decision to employ would be governed by the costs involved and the ability of the Division to meet this cost.

Mr. Clark then spoke on the powers vested in Council by the constitution. He stated quite categorically that decisions made by Council were legal and binding and that general meetings could not undo any decisions made by Council. As an example, Mr. Clark said that as Council had passed a motion to employ a Secretary, this meeting could not legally prevent them from doing so. However, Mr. Clark hastened to point out that although Council had legal right to proceed without the approval of general meetings it must be remembered that a general meeting could dismiss the Council subsequently at the next general meeting so that the Council would be foolish to proceed on a matter without the support of the members.

President Finney then said that this was the reason the question of a paid Secretary was brought to this Special Meeting. He then invited members to ask questions directed to Mr. Clark to reply to aspects regarding his report. 2ZDD asked the position regarding part-time paid assistance. Mr. Clark, in reply, said that a minimum of 20 hours was required and he thought the rates were about 90c per hour. 2OI then spoke on the need for the Secretary and in reply Mr. Clark replied that it was a matter of cost. 2QL then asked if a stenographer might be more suitable, keeping in mind meetings and conventions, etc. Mr. Clark replied that the costs would be about 3 dollars more but that a clerical type would be more flexible and economical, and as for conventions additional help would be required anyway and this could be a part-time stenographer as required. 2APQ said that conventions were taped and F.E. arranged the minutes. 2VN then said he didn't know what the Council's proposals were. The minute secretary then read out the minutes of the earlier meetings to clarify the position.

The President then stated briefly that Council had passed a motion appointing a Secretary, but that the negotiations had not been started until the outcome of the present meeting was known.

The Auditor had still not arrived and the Legal Officer then read out a report from the Auditor which laid out the duties of the appointee and recommending that the appointment was a necessity if the Division was to become more efficient and attract more members. Mr. Clark then read out an attached financial statement of the Division's position at present.

Mr. Rohan then arrived and explained the financial statement more fully and said that the costs of the Secretary would be an additional $1,100 per year at least, but this year's cost would be about $800. Mr. Rohan then called for questions.

2VN then came right to the point and asked could the required cost be met using the present balance sheet as a guide. Mr. Rohan, in reply, said that some small savings in cost must occur due to increased efficiency, and it must be considered that this may increase members and hence income. To further questions Mr. Rohan went on to say that the rearranging of all the various bank accounts to one account properly administered would show funds which should cover this contingency. 2VN went on to say that the formation of the federal company could cause a rise in per capita and increases in operating costs could lead to difficulties. Mr. Rohan, in reply, said that subscriptions may then need to be increased but again he emphasised that better management could limit the increase to 50c or $1.

2AGO then suggested that if $1 was all that was needed then go ahead. Various members then spoke in support of the idea of going ahead, they included 2AGN, 2AQJ, 1VK, 2AWA, 2CH, and 1RD. 2APQ suggested that as someone would be present during business hours it may be possible to hire the hall and the Secretary's time. Mr. Rohan in reply said that considerable capital was tied up in Atcheson Street and this would certainly be a way to increase income. He went on to say, however, that such income could involve taxation but if sufficient letting took place then tax notwithstanding it would be worthwhile. The President and Councillor Dave Jeans said that several organisations were interested in using the facilities at Atcheson Street and were prepared to pay for the service.

2VN then asked Mr. Rohan that in view of all the information available could the Division afford a paid Secretary? Mr. Rohan said that the Division could afford a paid Secretary. 2MP and 2ANT and several other members then spoke on the subject.

2APQ then moved a motion that the meeting endorses the action of Council taken so far and endorses any action to appoint a full time Secretary. 2KP seconded the motion and it was put to the vote. The entire meeting was for the motion and the writer did not see anyone vote against it. 2APQ then moved a vote of thanks to Messrs. Clark and Rohan for their efforts, which was carried by applause.

SILENT KEY

It is with deep regret that we record the passing of:

VK2AGL—Warren Lumb.
VK3VZ—Jack Duncan
VK5JK—James Sullivan.

DYNAMIC MICROPHONE & STAND

★ *LOW PROFILE* ★ *COMPACT* ★ *STABLE*

SPECIFICATIONS:

Impedance: 50 ohms, 50K ohms
Frequency Range: 80 to 12 Kc.
Output: —55 db. (0 db. = 1V./dyne Cm2)
Switch: D.P.D.T. P. to T.
Housing: Angle adjustable

ROBUST BASE STATION P.A. MICROPHONE

TYPE 45

ZEPHYR PRODUCTS PTY. LTD.

70 BATESFORD STREET, CHADSTONE, VIC., 3148 **Phone 56-7231**

Manufacturers of Radio and Electrical Equipment and Components

Agents: W.A.— D. K. Northover & Co.; S.A.— Neil Muller Ltd.; Tas.— Homecrafts (Tas.) P/L.; N.S.W.— Jacoby, Mitchell & Co. P/L.; Qld.— T. H. Martin P/L.

TRIMAX for a complete transformer range!

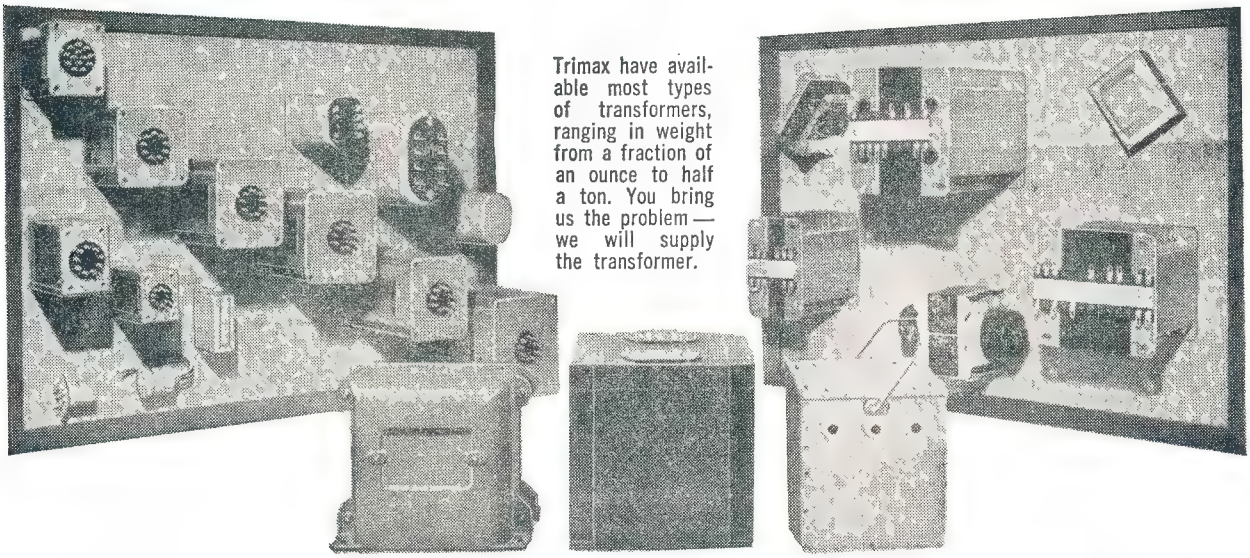

Trimax have available most types of transformers, ranging in weight from a fraction of an ounce to half a ton. You bring us the problem — we will supply the transformer.

L M ERICSSON PTY. LTD.

"TRIMAX" DIVISION

FACTORY: CNR. WILLIAMS RD. & CHARLES ST., NORTH COBURG, VICTORIA.. 'PHONE: 35-1203 . . . TELEGRAPHIC ADDRESS: "TRIMAX" MELB.

LM 51

The President then referred to the third item on the notice, and explained briefly why he left the previous meeting. He also gave a short report on the illness of Vice-President Bill Lewis, VK2YB. After a short discussion, 2AIM moved a motion of confidence in Council which was seconded by 2ZFX. The motion was again carried unanimously. The general feeling at this time was one of achievement and the writer feels that most present felt that a great step forward had been undertaken and on this note of confidence the President closed the meeting at 9.55. He then declared the June monthly meeting open.

JUNE MONTHLY MEETING

The meeting opened at 9.55 with the reading of the minutes which were adopted. Applications for membership were then presented to the meeting and a total of 36 full members and 15 associate members were accepted.

Dave 2EO then moved a motion that a token of thanks should be forwarded to Mrs. Gerdes for her efforts in the past as Secretary-Treasurer, a task which became too much for her to handle on a part-time basis. 2AKX seconded the motion which was carried by acclamation. President Finney said that a suitable token would be sent to Mrs. Gerdes.

Federal Councillor Pierce Healy then tabled the minutes of the last Federal Convention for ratification, discussion then ensued and in response to a question by 2ZRD regarding the payment of I.T.U. Fund quota, Pierce read out the minute. Dave 2EO said that as a member of the Constitution Committee he would like to read the minutes first. Pierce said that the ratification was only a formality, and all the other States had ratified them and as usual VK2 was hindering the Federal body by delaying ratification. 2AKX agreed that VK2 was often accused of this at Conventions. A short discussion then ensued on the motion to ratify the minutes, and when finally the motion was put to the vote, the motion was carried with only five voting against. The minutes of the Federal Convention have been ratified by the Division.

Federal Councillor Pierce then gave a short report on the Australis Project. Frank Hine reported on prediction chart and drew attention to a Computer Printed Prediction Chart which was on display showing conditions to some DX hotspots.

Shortly after 10 o'clock the President declared the meeting closed and all retired to the tea and biscuits for the ragchew to follow.

PRESENTATION OF O.T.C. PRIZE TO DAVID FRASER

At the general meeting held on 23rd June, Mr. Woods and Mr. Thatcher, of O.T.C., were in attendance to present the O.T.C. Y.R.S. prize to David Fraser of Westlakes Radio Club for obtaining his A.O.L.C.P. Mr. Thatcher, in speaking on this occasion, said that O.T.C. was well aware of the work of the Y.R.S. and that the scheme produced excellent material for the recruitment of technical staff. He went on to say that many fine technicians made a good career out of Amateur Radio and that quite a few technicians made a good hobby out of radio after twiddling knobs all day at work they went home and did the same thing as Amateurs! In conclusion, Mr. Thatcher said that David's achievement was very notable and he hoped to hear him on 20 metres c.w. before long with a full call; and then presented David with a G.E. Transistor Handbook. Mr. Thatcher remarked that all solid state men should not be without one.

PUBLIC RELATIONS AND PUBLICITY OFFICERS

Council is still seeking two willing workers to fill the positions of Public Relations and Publicity Officers. Both the positions would require some experience and the location would have to be in the Sydney area. Those interested should contact the Secretary or any Councillor.

AMATEUR RADIO CLUB REGISTER

Amateur Radio Clubs in N.S.W. are again reminded to forward details of their club to the Secretary for inclusion in the Radio Club Register. It is hoped to eventually have the particulars of all clubs in N.S.W. The Division is continually receiving requests from individuals for information on the nearest club to their address. Quite often we are not able to assist by not having the information sought.

W.I.C.E.N. NEWS

During the last few months the N.S.W. W.I.C.E.N. Committee have obtained over 130 f.m. carphones suitable for conversion to 146 Mc. net operation and much to the committee's surprise they disposed of the whole lot to N.S.W. Amateurs within two weeks of the information being made available to members of the release of the equipment.

Previously it was thought it may have been necessary to contact the interstate Divisions to assist in the disposal of this equipment, but it was not anticipated that the members in this State would be so enthusiastic to join in this mode of communication.

Besides the Sydney area, major groups are or will be soon operating in the Newcastle, Canberra, Orange and Wagga areas so that Interstate and N.S.W. visitors travelling in the eastern side of N.S.W. should be able to find Channel B (146.00 Mc.) reasonably active.

A plan has been formulated for a Communication Centre to be established at Wireless Institute Centre at Crows Nest and the scheme should be under way in the near future.

ILLAWARRA BRANCH

Amateurs in the Illawarra district are advised that the Branch meetings are held on the second Monday of the month in the Coniston Scout Hall on the corner of Strathern Ave. and South St., Coniston, commencing 8 p.m. Visitors are always welcome and Amateurs in the district are urged to attend meetings and assist the Branch to consolidate.

The office-bearers for the current year are as follows: Lyle Patison, VK2ALU (Ph. 2-6984), President; Laurie Jordan, VK2ALV, Vice-President; Alan Ward, VK2VH, Sec.-Treas. (Ph. 84-3520); John Simenson, VK2ANO, Asst. Secretary; Committee: Peter Fackender, VK-2BJF; Eric Fisher, VK2DY; Bob Isaacs, VK-2ZAI; Auditor, Basil Dale, VK2AW.

The Branch has an active net on 53.98 Mc. Any enquiries can be directed to Alan Ward to his call book address or phone on Sunday about 10 a.m.

CENTRAL COAST RADIO CLUB

The feature of the June meeting, held on Friday, 16th June, was a most interesting lecture by Mr. Lyle Ronalds, of Fairchild. Lyle, with the aid of a short film and a number of diagrams, outlined the "planar process" that is applied to the manufacture of silicon planar transistors. The mass production of tiny wafers ten thousandths of an inch square and four thousandths thick is an amazing process.

The lecture prompted many questions from the meeting, which were ably answered by Lyle. Despite very unpleasant weather, the meeting was well attended. 73, Bill VK2TS.

— . . . —

VICTORIA

EASTERN ZONE

I can now give you more details about our Zone Convention week-end held at Maffra on Saturday evening, 10th June, when 43 sat down to an excellent dinner. Forty attended the Zone Annual Meeting and the following office-bearers elected: George Francis VK3ZCG, President; Stan Platt, VK3ZPL, Vice-President; Reg Waters, VK3AWV, Immediate Past President; Stan Baxter, VK3ZAB, Secretary and Treasurer; Grahame Collie, VK3QZ, Zone and W.I.C.E.N. Co-ordinator; Albert Cash, WIA-L3289, Zone Note Secretary.

David Scott, VK3DY, has donated a trophy to be presented to the Amateur in the Zone who uses the bands the most and does his best to increase Zone activity.

As your new Zone Correspondent I will do my best, if you will all co-operate and let me have the news, either on the 80 metre or 2 metre hook-up to which I shall listen, or by letter to 20 Alamein St., Morwell.

OBITUARY

ALFRED KISSICK, VK3KB

The Federal Executive of the Wireless Institute of Australia announces with sincere regret the death of Alfred Kissick, VK3KB, the Federal Awards Manager, on 26th May, 1967.

Alf had not enjoyed the best of health in recent years, but nevertheless his practical interest in the W.I.A. did not cease and he did not hesitate to take on the burdens of Awards administration when the post was relinguished by the late Gordon Weynton, VK3XU, in May 1960. Some recent material presented to the Federal Historian proved that Alf had taken part in the 5th Federal Convention in Hobart in 1928 as a proxy delegate for the Queensland Division. The present Executive had the pleasure of meeting Alf in person at a meeting on 17th April last so his association with the Federal sphere of the W.I.A. covers a span of some 40 years.

Alf took out his call in the mid 1920s, first as OA3KB then later became VK3KB when country prefixes were changed. His main interest was DX working and in his enforced retirement he achieved and maintained leadership in the Australian DXCC c.w. listing. He also became the highest rating Australian Amateur in the A.R.R.L. Honour Roll and, in addition, was the first VK operator to work and confirm 300 countries.

Members of the W.I.A. and Alf's many DX friends throughout the world extend sympathy to his family in their loss.

JAMES PATRICK SULLIVAN, VK5JK

The VK5 Division announces with sincere regret the passing of "Jim" Sullivan, VK5JK, aged 62 years, who had been in the Repatriation Hospital for some weeks prior to his death, in a serious condition.

Active on the air for many years post-war, he was keenly interested in Amateur Radio, both as a hobby and as a means of serving the general public, and with this in view he was solely responsible in organising W.I.C.E.N. against many obstacles both inside and outside of the W.I.A. in VK5, resigning from the position of Co-ordinator only when he felt it was a going concern and his sense of duty was satisfied.

A prisoner of war on the Burma railway line as a member of the 2nd/1st Fortress Signals, and a patient sufferer practically all of his life from the effects of the privations, he will be missed by all with whom he came in contact, most of whom were probably quite unaware of just how much he suffered at times.

To his sorrowing wife Maureen, and his daughter Paula, we extend our deepest sympathy and can only say that our thoughts are with them in this their hour of grief.

VICTORIAN DIVISION, W.I.A.

ANNUAL DINNER

will be held on

FRIDAY, 3rd NOVEMBER

in the

ORIANA ROOM

McCLURE'S RESTAURANT

454 St. Kilda Road

Price: $5.50 per head

Reservations: Contact the Admin. Secretary. Phone 41-3535.

Wireless Institute of Australia

Victorian Division

A.O.C.P. CLASS

commences

MONDAY, AUG. 21, 1967

Theory is held on Monday evenings, and Morse and Regulations on Thursday evenings from 8 to 10 p.m.

Persons desirous of being enrolled should communicate with—

Secretary W.I.A., Victorian Division, P.O. Box 36, East Melbourne (Phone: 41-3535, 10 a.m. to 3 p.m.), or the Class Manager on either of the above evenings.

We have been getting a good roll-up on our Friday night 80 metre Zone hook-up, and also our Sunday night hook-up on 2 f.m. channel A, both at 2000 hours. 73, Albert Cash.

WESTERN ZONE

Unfortunately, I have not been very active on the bands the last few months so I have very few notes. Bill 3ZAX is working on a new 6 mx tx using a pair of 6DQ6s. I saw it when he visited us and he has gone to a lot of trouble with the metal work. Bob 3ARM has been working with Rodney VK0CR down at Macquarie Island. Roy 3ZYG has got a new tower up 90 feet now so we can expect some good signals on 2 and 6 metres from his QTH. Believe Gavin 3AEJ is putting out a nice signal on the bands lately. Have not spoken to Herb 3NN for months, but I am told he is about as much as ever. Activities at this QTH have mainly been on the audio side of things. I have just completed a new stereo rig for the sitting room only to find that it demodulates 2 mx just as well as a stereo record. I will have to watch what I say now, caught the XYL monitoring me on the new amp the other night. 73, Tony 5ZAI.

LOW DRIFT CRYSTALS

☆

1.6 Mc. to 10 Mc., 0.005% Tolerance, $5

☆

10 Mc. to 18 Mc., 0.005% Tolerance, $6

☆

Regrinds $3

THESE PRICES ARE SUBJECT TO SALES TAX

SPECIAL CRYSTALS: PRICES ON APPLICATION

MAXWELL HOWDEN

15 CLAREMONT CRES., CANTERBURY, E.7, VICTORIA

Phone 83-5090

QUEENSLAND

CONVENTION AT ALEXANDRA HEADLANDS

The Queensland Division Convention, held at Alexandra Headlands on the week-end of June 3 and 4, was a great success in spite of the inclement weather. The Convention was organised by the Bundaberg Amateur Radio Club on behalf of the Queensland Division of the W.I.A.

Seventy-five points of rain fell on Friday night and more rain fell on Saturday afternoon, Saturday night and a shower late on Sunday afternoon. However, it takes more than a little rain to keep our VK4 boys away from their favourite Convention, as the attendance figures of 203 very clearly demonstrates.

Those who attended were rewarded with a beautiful day on Sunday and even on Saturday, our enthusiasts were not deterred by the somewhat bleak conditions, especially the v.h.f. boys who ran most of their contests late on Saturday night, after the Doughnut factory closed down, and who were heard returning home just before daylight.

The organised contests commenced after morning tea on Saturday and finished at lunch time on Sunday, giving everyone plenty of time for rag-chewing, etc. All the usual contests were held for both v.h.f. and h.f. members, plus competitions for the XYLs and harmonics.

Probably the best of the new competitions this year was the c.w. contest. Jeff 4XP, as c.w. operator, and Vince 4VJ, as assistant, did a colossal job. This event attracted a big entry from h.f., v.h.f., A.O.C.P. class members and Y.R.S. lads. The spectator gallery was crammed with people, and the hushed and interest-laden atmosphere certainly lent to the event. The Morse started at a speed of 4 w.p.m. and finished at a sizzling 33 w.p.m. One by one the competitors dropped out, till about four or five of the real experts were left.

Organised activities for the harmonics were a new feature that was badly needed, and a big thank you to Tina Steggink who took charge of this department. The ladies' novelty hat competition was well supported and the ladies showed ingenuity as well as excellent taste in their creations. The contest was judged by Peggy VE4PE, a visitor from Canada, who, incidentally, was a natural for the most distant visitor.

The home-brew contest entries were a record. Our sincere thanks to Eric Gardiner, the judge, who had the unenviable task of choosing from the really excellent work displayed in all sections. Our thanks also to all those who entered this competition—without all your entries, this contest would lack any real interest. The standard and range of entries was unbelievable, compared to other years, and included a t.v. camera, s.s.b. transceiver, and other fully transistorised gear, as well as a remarkable range of test equipment.

Among the many willing helpers who materially assisted to make the Convention the success it was, special mention must be made of Max 4DA for his adept handling of the White Elephant Sale and other disposal equipment. Paul Rudachoff, with a rare combination of tact, humour and brute force, was indispensable in getting people to the right places at the right time. Reg 4VX and Vince 4VJ did the 4WI broadcast with their customary efficiency and finesse. Joscelyn 4JJ and Marie WIA-L4026 handled registration with charm and efficiency and extracted a huge amount of db from the record crowd—a very cunning move on the part of the organisers. Bob 4ZRC and XYL Joan, being old hands at the game, came to the rescue of Rusty when required. Our thanks to Don 4NK, our Club Secretary, who handled a mountain of correspondence in the weeks preceding the Convention. George 4ZMC proved himself the right man to handle the v.h.f. activities. Our thanks to Bob 4UB, Danny 4ZDD, Bob 4ZZE, Eric 4ZR and Tom 4ZAL, for the help they gave.

Total registrations—203; total meals served—in excess of 500; cups of tea must number several thousand. Among the congratulatory remarks heard in the closing stages were "Best Convention ever" and "A record in all departments".

Looking to the future, B.A.R.C. would like to see another club top our efforts next year. This would give us a higher mark to measure ourselves against on some future occasion. There is nothing like friendly rivalry to bring out the best in all of us. 73, Rusty 4JM and Roy 4ZWR, on behalf of the organisers.

IPSWICH AND DISTRICT RADIO CLUB

The 1967 VK4 Convention is now over for this year and I am sure it will linger long in the memories of all the OMs and XYLs who visited Alexandra Headlands. This Convention was hailed by everyone as the biggest and best ever staged in VK4 and all the success is due to the splendid effort and planning done by the Bundaberg Radio Club, who deserve a pat on the back for their labours. The Bundaberg Club challenged all clubs to see who could field the most members. They won with 32 members, however we came second with 26 members present, so we had to concede defeat and see the "White Lady" return back to Bundaberg. She would have been most welcome at our Annual Birthday Party in July. Once we were neck and neck with equal members present but Bundaberg seemed to pull members out of thin air or perhaps square bottles would be more appropriate.

One of our members who wishes to remain anonymous was most annoyed. It appears his bedroom was only one with a door on it; how news travels! That stopped him roaming the halls at night ringing that bell he carries.

While en route to the Convention, three members were heard on 53 Mc. by George 4ZLG who called in, but alas their signals were lost to George as he moved into the tall buildings of Brisbane, so George had an eye ball QSO later in the afternoon with the same three members at Alexandra Headlands.

Wayne 4ZN now has a 40 mx mobile installed in his VW. The car looks like a mobile communications centre for some space project. If any more gear is installed XYL Jeanette will have to ride in the back seat.

I am sad to say our only rep. in the c.w. contest at the Convention was Dave 4HW, but he was handicapped by the four plates of jelly and seven hamburgers he had eaten; seems they slowed his Morse handling down considerably. While on the subject of food, I suppose it was noted by all present which club was always first at the table at meal times and last to leave?

The Club's pro, Bill Jehn, WIA-L4001, was very busy up there, and was much in demand looking after his s.w.l. group.

The XYL of one of our new members was caused some embarrassment while en route home due to a case of car sickness with a harmonic. This called for a change of apparel from slacks to more conventional dress on the roadside. We can assure all intending members this is not the initiation ceremony the club usually does.

The club members would like to take this opportunity to congratulate our fellow member Col 4ZMA on his promotion to Sergeant and wish him a happy holiday in Townsville. He will be 6 mx mobile all the way and will be looking for contacts. Col's only complaint with the promotion is the fact that increased social status is called for now in the mess, but seems that a tie was all the extra required.

For Reliable Connections

OTL

RESIN CORE SOLDERS

O. T. LEMPRIERE & CO. LIMITED

Head Office: 31-41 Bowden Street, Alexandria, N.S.W. and at Melbourne, Brisbane, Adelaide, Perth, Newcastle

OTL/78

The latest bug to bite a few of our members is 40 mx mobile and helical whips, d.c. converters, etc., are the order of the day for discussion. I am afraid it has bitten me also, and I will be mobile on 40 mx in August while on my way to VK3's snowfields. So how about a few contacts, so the log book won't look too bare.

The Club's Annual Meeting and 5th Birthday Party is to be held in the Club House on 11th July. This is the first time it has been held in our Club House. Last year we did not have any steps or lights in the Club House. We are expecting a big roll up of visitors and all will be welcome. Next month I hope to be able to give a full report on the new office-bearers and a brief report of the event. 73, 4GT.

BUNDABERG AMATEUR RADIO CLUB

The Club has been running along very quietly this month, after the hectic last few weeks with the Convention organising and the Youth Week Display, however, there is still plenty of activity, particularly on the v.h.f. side of things.

Club members recently purchased 15 Pye Mk. 3s to be converted to the 6 metre band. The net frequency is 53.032 Mc., the transceiver will have either xtal locked or tunable front ends. The upsurge of activity should give a lot of satisfaction to the members who have always been plugging for 6 metres.

About 4 or 5 of the sets have been converted so far and are very satisfactory. The 6 metre beam at Elliott Heads was dismantled to make way for the new 60 ft. tower for the quads. Looks like a nice little antenna raising party in store.

As reported last month, Frank VK4UK is back on 80, 40, 20 s.s.b. Frank is not happy with the vertical and is taking a hard look at the quad as the answer to his problem, for 20 anyway.

Our latest call sign, Dave VK4DJ, is very quiet—the lull before the storm, perhaps. Dave vows he is going on c.w. for a start, learning by other people's mistakes.

The club offers its congratulations to the new Y.R.S. State Supervisor, Danny VK4ZDD, for the flying start he made. It seems the Club will have to buy a h.f. tx now to get into those Y.R.S. hook-ups each month.

The July meeting at the time of writing is almost upon us. The item of interest for the night will be a talk, together with colour slides, of a recent trip through Japan by Tina, XYL of club member, Clem.

After months of frustrating work on the part of several members, including myself, to develop a 24-hour clock, it was something of a shock to have the job done very smartly by club member, Clem Steggink. The result of Clem's work is a joy to behold—"just like a bought job". I may pursuade him to write an article on it some time, but not before he builds me one.

The Jamboree-on-the-Air is almost upon us again. There will be several stations operating from the various Scout Dens around town. 73, Rusty VK4JM.

TOWNSVILLE AND DISTRICT

The June meeting of the local radio club was very well attended, which speaks well for the effort put into it by some of the members to round up over 20 members to hear a lecture by Professor Boyd (University of London), who had the members enthralled as he spoke to them on the various Sunspot Cycles, behaviour of the "D" Region and the upper atmosphere. The meeting went on to the late hour of 10.45 p.m. It is to be hoped that the club will be able to get further speakers from the Townsville University to lecture on various matters of interest to all.

Very sorry that I heard too late about the VK3 boy who has become a VK4 and going to do a stint of 12 months on Willis Island. A pity, as I would have liked to take him around the various shacks, also show him the surrounding sights that tourists rave over; better luck maybe on his return.

Evie 4EQ called the other day to inform me that the 4WI news was coming through on 14.342 Mc. So once again I was able to call back to the boys in Brisbane. Did notice that there were very few call backs when asked. Doesn't seem like old times when the boys do not call in to air their grievances. Maybe all are contented with the way things are being run, or maybe it is too much of a chore to help out in any way?

Very happy to report that the City Council has approved of the local club being granted a lease of Council land on which to build their club house. It now behoves all to get together and get the necessary finance to build their club rooms. So boys, the ball is at your feet. May you soon have your building. 73, Bob 4RW.

SOUTH AUSTRALIA

The monthly general meeting of the VK5 Division was held to what is known in theatrical parlance as a "sell-out". So much so, that four new rows of seats had to be brought in from the storeroom, and even so there were one or two latecomers who did not manage to get a seat at all. In view of the fact that it was a particularly cold night, it was quite unexpected and only goes to show the present enthusiasm of the Division for its monthly meeting night.

The night took the form of a buy-and-sell, or as it is more politely put these days, a jumble sale night, and this probably was the answer to the unexpected crowd, because through the years this type of night has always been a success. The meeting was opened on time by the chairman, Murray 5ZQ, who immediately referred to the death recently of Jim 5JK and not so recently, Joe 5JO, and asked members present to stand in silence for one minute in their honour.

There was no correspondence, no Federal business, and very little Divisional business, and aside from a little commentary on W.I.C.E.N. from Geoff 5TY, a little discussion on disposal matters from Gilbert 5GX, and one or two matters of general business, the business side of the meeting gently faded out. A smoke-oh followed together with the distribution of QSL cards by George 5RX, and the stage was then set for the "piece de ristong" of the evening.

So much has been written about buy-and-sell nights, that much to the surprise of VK4 and VK6, I will not labour the point, but suffice to say that the auctioneer for the night was a very modest, unassuming, muscular, and athletic type, who must remain anonymous, if only to spare my blushes. If the chuckling and laughing that took place throughout the auction was any indication of the success of the evening, then all I can say, with my usual modesty, the night was something of a riot. Phil 5NN and Ron 5KS assisted both manually and technically toward the enjoyable evening, which closed at 10.45 p.m., after the disposal of almost a record number of bits and pieces at varying prices.

Quite a number of the older members present at the meeting, among whom were Pete 5FM, Les 5NN (looking younger than ever), and Leith 5LG, who admitted that now he was once again on "the police force", felt that he should show up at the meetings now and again, and last but by no means least, Max 5GF who usually manages a couple of visits a year.

Reference was made by Rob 5WA in apologising for the absence of Marshal Hider (he was at the newly started code class at the School of Modern Languages in North Adelaide) to the fact that the class had become so popular that a Saturday morning class had now started, also a new Tuesday night class, which with the Thursday night class, was proving just how successful the venture had become. Phil 5NN remarked to me that it would appear that at last we had struck oil in our search for code classes in VK5, and Geoff 5TY also reminded those present that if they were thinking of joining any further classes that might be started, not to forget to mention that they belonged to the W.I.A., because members would receive preference, and every consideration. Anybody desiring information concerning these classes should contact Geoff 5TY who, at the request of Council, paid a visit of inspection and was quite impressed with what he saw.

Leith 5LG, mentioned earlier as not having been along for some time to the meeting nights, suffered from the same trouble as do all members who are missing for a while—that of not knowing all of the younger members present—and as the younger members by now greatly outnumber the older ones, he was no orphan. However, I noticed him get among the crowd and it was not long before he was nodding his head and shaking his fists in the air, so can only believe that he was once more at home!

One of my espionage agents, well planted in the middle of the V.h.f. Group, tells me that a recent importation from VK6 was present at the last meeting of the Group, none other than Rod ex 6ZDS, who has taken up residence in our fair city, and if all is to be believed, he is well clued up on v.h.f. and associated techniques and will make a splendid addition to our Group. I understand that one of his mates in Charlie 6LK is also on his way to take up residence here, which is all to our good. Rod's new call is 5ZSD, and the reason that I have given him such a build-up is because he is reported as saying that he only came to VK5 for two reasons, the first I have forgotten, the second is that he wants to meet PanSy!! Rod—this is so seldom!!

The recent W.I.C.E.N. fox hunt on 53.1 Mc. was a huge success, so I am told by one of my spies disguised as a fox, the cunning rascal, but I also believe that Barry 5ZMW ran out of foxes before the others even found any. Everything was checked, speed, etc., and he came through with flying colours.

Lance 5XL seems to like the South Coast, judging by his usual week-end signing over as "Portable at Encounter Bay". I wonder if it ever becomes a case of fishing interfering with Amateur Radio or vice-versa.

Jack 5LN heard calling Athol 5LQ on 7 Mc. the other Sunday morning without much response. Also heard someone else chipping in with the statement that it would be just as easy to try throwing a stone on his roof, probably it would have been just as effective. I knew that they lived in the same general direction from my QTH, but I never thought they lived that close.

George 5CV, better known as the co-ordinator of the "Thunderbird Club" in the Pacific area, is on the move again. It seems no time since he was over Wyndham way, but when heard the other morning he was in the high country in southern VK2, Cabramatta, or some such thereabouts. No reports of snow as yet in that area, so if he was contemplating a little ski-ing, it would be no dice.

Heard a certain well known Amateur telling his friends not to telephone him during "Homicide", and in the same breath talking about a power supply of 1400 volts at around 300 mA. No names mentioned in case it leads to homicide!

The 53.1 Mc. boys seem to keep things alive daily, judging by the way that they can be heard regularly moving to and from work, as well as at other times. Garry 5ZK was recently heard "mobile on the Anzac Highway", and sure enough, according to one of my mobile espionage agents, there he was, but going in the opposite direction.

"The man from Franklin Harbour", Brian 5BI, has been heard using the better known name of Cowell as his QTH. One of my spies in the Postal Section—he has an important job painting the sticky stuff on stamps—suggests that Brian should try and confuse us a little bit further by using "County Jervois" at times. He further informed me that he believed the hospital at Cowell was known by that name at one time, if not now. Was he right Brian? Understand that Brian has been giving his AR7 the once over and is complaining about some spot weld failures. I am posting him up some large nails and a small hammer, or should it be some small nails and a large hammer?

Talking of AR7s, Phil 5NN appears to have "lost" some coil boxes from his AR7, and is suggesting, in his usual polite and tactful manner, that a little searching in the pockets by a person or persons unknown might yield the answer. The grin with which it was said, took out the sting from the suggestion, but I did not quite like the fixed look that he gave me, and it was not my conscious ticking over, either!

Vern 5VB—The Admiral to you—is reported as having recently paid a visit to son-in-law Brian 5BI at Cowell—or Franklin Harbour—or County Jervois—have it which way you like. Don't know if it was just a week-end jaunt or a holiday visit, but I understand he was accused of causing QRM to Brian—using an electric drill I am told. Fancy a visitor placing himself in such a situation, but then these naval characters are a bit on the devil-may-care side anyway!

Mos 5TU called on Tom 5TL—our genial publications officer—seeking a certain publication on Tom's shelves. Uncle Tom was not at home; so Aunty Tom—oh I am a one—invited him in to search for himself. His particular want was out of stock, so Mos went on his melancholy way, but it did prompt Aunty Tom to tell Uncle Tom on his return that having dealt with three enquirers that day she felt that she now qualified for the title of honorary publications officer. Tom's reply is not known at the moment, more's the pity, simply because he would not tell me. Cowardy-cowardy-custard!!

Reports to hand tell of the fact that Ron 5KS is taking steps to get the rest of his tower sky-borne in the near future. Don't know just when, but will certainly be visible for miles around when complete. I wonder just what kitchen utensil belonging to his XYL will be included in the set-up. What's this about kitchen utensils? Well, Ron always boasts that he never builds a piece of equipment without including at least one kitchen utensil belonging to his XYL, such as a cake tin, or a baking dish, etc., etc., and says it in such a brave manner that we are almost convinced of his heroism—almost!

In talking to Jack 5JS recently I happened to mention to him that "Old" Roy 5AC was still going great guns and did not look a day older than when I saw him last, about five

years or so. "What do you mean old?" said Jack. "He is not much more than 60 years old." Well, this somewhat staggered me because as long as I can remember Amateur Radio, "Cookie" has been on the scene and I would have said he was about 90 years old. So what about it Roy, just how old are you? Oh, come on, don't be coy, I won't tell anybody, you know me—PanSy the oyster they call me!!

Talking of the "oldies", I notice that Joe 5JT has been getting plenty of publicity in the local newspapers concerning his reaching the grand old age of eighty years. Photographs of him at his operating position in the shack, headlines concerning the greeting cards he received from his many world friends, and lots of pats on the back for his past exploits in Amateur Radio. All in all, a great boost for Joe and Amateur Radio in general, which is all to the good. My well known modesty prevents me from saying too much, but whoever is handling the publicity for Joe is doing a wonderful job, I wish I could do as well —ahem.

Met Al 5MF the other afternoon and we had quite a chat concerning radio and Radio Amateurs, and I could not but notice that with his usual poise and diplomacy, he only had a few shots to open the conversation concerning "The Thing". When he could see that I am not rising to the bait, he changed the subject to that of his new crank-up mast for his beam, and waxed quite eloquent on the subject. My information on the subject tells me that he has been trying to talk his XYL into the idea for some time, without much luck, but in a weak moment she said that it might not be a bad idea and before she had time to take a second breath, the workmen from Hills Hoists were in the backyard throwing cement in all directions! She knows now that if you give an Amateur an inch, they will quickly take over the backyard!

One of my trainee spies, right in the middle of the R.I. section, tells me that Phil Traynor, who recently retired from the Superintendent's chair, is leaving VK5 for greener fields interstate, just where and what state was not stated. All I can hope for is that he is not going to VK3, just what they do to ex VK5s is nobody's business!

Les 5PN seemed to enjoy himself at the meeting. He was telling me that although he has not been active for about a year or so, he definitely has not lost his interest in our grand old hobby, and sometimes feels the old itch.

Brian 5CA, who acts as the base station for W.I.C.E.N., recently heard a signal from Price on 53.1 Mc. the other day, and called back again and again, but with no signs of contacting the said signal from Price. Eventually he woke up and switched the a.c. on and frantically called again. Need I prolong the sad tale, even Brian admits now that the lights on the panel look extra swell at Xmas time!

Have you taken out your Electrician's Licence yet? If you have not, don't forget under the new licensing bill introduced into Parliament this year, for electrical workers, after January 2, 1968, anyone who wants to do any work on the 240v. mains in the shack or house wiring must have one of the three grades of licences —A, B and C. Amateurs should have no trouble in securing a class B licence, so go to it, either to E.T.S.A. at the corner of Rundle and Pulteney Streets, or to the Hilton Service section, where the necessary forms are available. Don't forget—you might regret.

The passing of Jim 5JK was not altogether unexpected, as he had been in the Repatriation Hospital with his heart, and seriously at that, for about six weeks or so, but even so the news was a little sudden. He never completely lost interest in Amateur Radio, and often would bob up on 40 mx for a short QSO, quite often with his old mate Rex 5KY. Words at a time like this mean little, but as my grandson said when he heard the news—"Uncle Jim was a kind man"—and what better epitaph could anyone want?

Well, this is no good, I can't end the notes in such a sad vein, so I will tell you just what Phil 5NN said to me when I warned him that I was writing a little paragraph about him and "The Thing". Lifting his head in a gesture of disdain he said, "Write what you want anytime, I only take it with a bag of salt." I pointed out that he meant a pinch of salt, not a bag. "That's what you think," he said, "with what you write, only a bag of salt would fit the bill." Oh dear, oh dear. 73 de 5PS, PanSy to you!

— . . . —

WESTERN AUSTRALIA

Well, here we are again doing battle with old father time, the Commissioner of Taxation and all and sundry. There's no doubt about it, the guy who coined the phrase about to save time is to lengthen life knew what he was saying.

That Kalgoorlie Hamfest a few months back was certainly a well planned affair and congratulations are due to all concerned. Unfortunately, or perhaps fortunately for Kal, I was unable to attend, but a note from Doug 6EP has brought me up to date on these matters. The whole thing kicked off on the Saturday with a 41-mile tour of the Goldfields areas, covering all points of interest. Ten cars participated with four radio check points to keep them from straying.

The bachelor quarters of John 6ZBY became the meeting place on Saturday evening.

After listening to the Sunday news broadcast and call-back, some 32 Hams and XYLs went on a tour of inspection of the School of Mines, which proved very interesting. The Geological Museum was inspected and the electronics section was very ably explained by guide John Foxton.

After lunch all visitors gathered at the b.c. station 6KG, the domicile of VK6JF, before proceeding to the Hampton Hill property of Mr. Barton Jones, who kindly permitted the use of his shearers' quarters, kitchen and conveniences. Mr. Jones gave a talk on the district and described two ghost towns.

Then it was time for the cooks to come into their own. Mrs. Young (mother of John 6ZBY) and Graham 6ZEZ struggled with a wood-burning monster to cook some 120 chops and 120 sausages. Wow!

Troubles never come singly—so an old saying goes—and Bill 6DR can surely confirm this. It appears that Bill had just recently completed construction and testing of a transceiver and was bearing it proudly homeward, comfortably resting on the seat of his motor vehicle. Alack and alas, another car tried conclusions with them and succeeded in upsetting their equilibrium. Bill was projected out through one door, the transceiver through the other, to be neatly bisected by the open door as the car started to roll. Both car and transceiver are write-offs. Hard luck Bill, but stick with it OM, there are better times ahead.

A little bird told me that new beams are the order of the day for both Glenn 6ZGO and Ron 6ZDF. Excuse me while I replace the speaker cone in my receiver.

Heard a couple of "old" call signs operative again recently, Harry 6HS spraying the sunny metropolis with r.f. from a vantage point on Lesmurdie Hill. Then, on another occasion, John 6JW on the 6 metre a.m. net. Mal 6MU sidebanding on 80 metres also drew my attention.

Standby, I'm up on that soap box again. This time to record a case of illegal transmission, downright discourtesy and utter selfishness. A relative newcomer to the band had the "audacity" to fire up on a.m. on 20 metres, calling CQ. Up popped a voice, "We don't want a.m. on this band". No call sign. I am not trying to "knock" sideband, it is a great technical advancement and here to stay for sure. However, I am speaking for a bit of common courtesy and some small measure of respect for the rights and feelings of others. Since when has not there been room for all modes on this and other bands? There may be circumstances which necessitate the use of humble gear. Why then should the state of a man's bank balance deny him the right to operate on any band, provided he operates within regulations? While most operators are gentlemen, there is an uncomfortably large number of jackalls hiding 'neath the guise of Amateur operators. Fair go, Aussie—let's try and keep 20 metres as a happy hunting ground, not let it sink to the level of a "pig's paradise".

Turning to a much brighter topic, news to hand indicates that yet another Youth Radio Club has commenced operation. The boys from Christ Church Grammar School are settling down to a study of things electronic. Nice work fellers!

Rumour has it that Rivervale has been the centre of some very strange goings on just recently. Folk are whispering about a strange young Radio Ham (aren't ALL Radio Hams a little strange?) who has been seen to climb to the tippety top of his tower clutching a beach umbrella. What the heck? No, it's okay, relax —relax—it was only Les 6ZFE preparing for his sojourn to the Eastern States to do a bit of parachuting. Many happy returns to earth Les!

David 6DI has been operating on 10 metres with a single loop quad. Not by choice though, he was unlucky enough to lose the other half in a devastating storm which struck the area wrecking many homes.

Farmers in the region presided over by the "X-Group" are zealously guarding their dairies. Since the success of Aub's (6XY) rotating mechanism, separators are at a premium in this district.

At this juncture I will endeavour to beat a dignified retreat—cheers and best 73, Ross VK6DA.

Repairs to Receivers, Transmitters; constructing and testing; xtal conv., any frequency; Q5-ers, R9-ers, and transistorised equipment.

ECCLESTON ELECTRONICS

146a Cotham Rd., Kew, Vic. Ph. 80-3777

Stockists of Radio and Electronic Components for the Amateur Constructor and Hobbyist

First Ring, Write or Call on

WILLIAM WILLIS & Co. Pty. Ltd.

430 Elizabeth St., Melbourne. Ph. 34-6539

HAMADS

Minimum 50c for thirty words. Extra words, 2c each.

Advertisements under this heading will be accepted only from Amateurs and S.w.l's. The Publishers reserve the right to reject any advertising which, in their opinion, is of a commercial nature. **Copy** must be received at **P.O. Box 36, East Melbourne, Vic., 3002,** by **5th of the month** and **remittance must accompany** the advertisement.

FOR SALE: AR7 complete with coil boxes, $65. Geloso 4/104 VFO on chassis, 807 meter and pi coupler included, $18. AT5 with antenna coupler in steel box, $10. Ferris Radio AC/DC, $16. Power Supply: 550v., 450v., 250v. and 40 plus 40 output, $20. 60w. PA, $20. Other items reasonable offer accepted. R. Jordan, 36 Gale St., Aspendale, Vic. Ph. 90-3092.

FOR SALE: FL100B SSB Transmitter, 120w. p.e.p., only 18 months old, looks and works as new, complete with mike, $320. G. A. Turner, VK3GN, 9 Toutcher Road, Ararat, Vic. Phone 21292.

FOR SALE: National NCX5 Transceiver in original carton, 5-band SSB and AM, two RF stages, digital dial read-out, National's best, absolutely as new (few hours use only), complete with XCU27 calibrator and Turner 350 mike, $750. VK4DA, M. J. Swaby, Mail Service 902, Dalby, Qld. Phone 6004U.

FOR SALE: R.M.E. Rcvr., model 69, spkr., B.C.-28 Mc. Two stage 7 Mc. Xmtr. Two BC457 VFOs, 7 and 3.5 Mc. BC458 with p.s., one BC453, 85 Kc. Rcvr. A.W.A. 5 valves and chassis. One 7 Mc. Convtr., one 21 Mc. Convtr. Mod., p.p. 807s, 60w. Trimax Tranf. with p.s. Mod., p.p. 6L6, 30w. Trimax Transf. with p.s. One No. 19 12v. Genemotor, also other 12v. Genemotor. Autotransformer, 0-240, 24v. taps. Step-down Trans., 240-110v. Three 6.3v. Fil. Trans. Power Supplies, 565v. aside, 400v. aside. Eight mA. and volt Meters. Battery Charger board with meters. One-valve Pre-selector. One 110v. Transformer. Pair 866 valves, pair 815, one TZ40, one 828, two 211 with sockets. 5 inch CRT socket. Relay Power Supply. AC Power Supply with drum graph. One Airzone BC Mantel. One DW Chassis and Tubes. One A.W.A. Battery Chassis. One Astor Chassis. Valve Tester, FM Adaptor, several chassis, power supplies, tubes, relays, panels, two racks, assorted parts, all good. Carton "RH&TV" and "QST" etc. Prefer offer for lot. S. Widgery, 181 Victoria St., Ballarat, Vic. Ph. 22340.

FOR SALE: One A.W.A. 6 volt FM Carphone, 2 mx Channel A, complete in good working order. Suit Volkswagen. $30.00. VK3AUN, Tel. 46-4200 (Melb.) evenings.

SELL: Galaxy V. Transceiver together with AC Power Supply, $350. Also Mosley TA33 Trapmaster (full size), $80. Or sell both together for $400. Also Eddystone 840C Communication Rx $80. J. O'Toole, 35 Rosemore Road, Rosebud, Victoria. Phone Rosebud 6-8085.

SELL: Geloso G4/214 13-valve Double Conversion Receiver, covering six bands, 80-10 mx, includes xtal calibrator, xtal filter, product detector for SSB, etc., in mint condition, $120. Pye Reporter Transceiver, converted with crystals for 53.1 Mc., transistorised power supply, QQE03/12 final, series gate modulator, $20. VK5ZPB, Phone 46-4829.

WANTED TO BUY: AR7 or similar Communications Receiver. Send particulars to Peter M. Curran, P.O. Box 49, Piangil, Vic.

A LARGE RANGE OF TRANSMITTERS, RECEIVERS, TEST GEAR, AND DISPOSALS RADIO PARTS AVAILABLE

★ **EICO 753 S.S.B. TRANSCEIVER**
Triband 80, 40, 20 metres. Solid state VFO. VOX/PTT operation. Receiver offset tuning (10 Kc.). 180 watts p.e.p. S.S.B. Kit $328.78 inc. tax.

★ **PRECISION LOW FREQUENCY CRYSTALS**
1500 c.p.s., vacuum mounted, octal based. 0.001% accuracy. At a give-away price of $10.00 ea. (Limited quantity).

★ **KYORITSU K126B TRANSISTOR DIPPER**
435 Kc. to 220 Mc. (8 ranges). Internal battery supply. Zener regulated. Solid cast case. Accuracy ±1%. Two transistors, 3 diodes. Internal 1000 c.p.s. modulation. Also functions as Absorption Wavemeter. $39.75 inc. tax.

★ **VARIACS**
115v. 18a. New in cartons, $18.00 ea. or $32.00 pair.

★ **TRANSCEIVERS, TR1986-7**
115-145 Mc. Employs heterodyne exciter in transmitter. TT15 p.a. Single xtal locks Tx and Rx on same frequency. In-built modulator. Supplied with 4.86 Mc. xtal. $30, circuit $1.

WANTED TO BUY

Communication Receivers, Test Equipment, etc. Call, write or phone Equipment inspected and picked up at your convenience any night or week-end.

★ **SR550 DUAL CONVERSION COM. RECEIVER**
160 metres to 6 metres, Amateur Bands only. 3.5 Mc. xtal band edge marker, xtal supplied, product detector for s.s.b. $240, 10% discount for cash.

★ **SCR522 V.H.F. TRANSMITTER/RECEIVER**
100-150 Mc. Complete with tubes, $28.

★ **PERSPEX SHEET**
1/16 inch thick. Size 4¾" x 16". $1 per sheet.

★ **COMMAND TRANSMITTERS**
4-5.3 Mc., 5.3-7 Mc. Complete with tubes, $15.

★ **TR3624 TRANSMITTER/RECEIVER**
Approximate frequency, 200 Mc. Contains 46 miniature tubes, $30.

★ **VALVES**
EF50, 20c ea.; 7C7, 10c ea.; CV131, 6CQ6, 50c ea.; 6AC7, 20c ea.; 6AL5, 20c ea.; 6C4, 6AM5, 50c ea.; 6J6, 50c ea.; 6FQ5, 50c ea.; 12AD6, 60c ea.; 12AU6, 60c ea.; 12BA6, 50c ea.

★ **METERS, P25 TYPE**
0-500 uA., $5.25; 0-100 uA., $6.95; 0-1 mA., $4.50; 0-10 mA., $4.50; 0-50 mA., $4.50. Full range of Meters and Multi-Testers available.

★ **MINIATURE CAPACITORS**
New shipment. 600 v.w. Values: 0.001, 0.02, 0.005, 0.0005, 0.0002, 0.0001 uF. $2 for 80, plus freight.

★ **EDDYSTONE MODULATION METERS**
160 Metres to 10 Metres. Provision for phones. Complete with antenna and carrying case, $12.00.

★ **CAPACITORS**
Block Type: 10 uF. 750 v.w., $1.50 ea.; 6 uF. 750 v.w., $1.25 ea. Electrolytics, can type: 16 uF. 500 v.w., $1.00 ea.; 8 uF. 500 v.w., 40c ea.

★ **PETERSEN RADIO (U.S.A.) 100 Kc. XTAL CALIBRATORS**
Comprising 1 transistor 100 Kc. osc., 1 transistor emitter follower. Fibre glass printed circuit board. Provides accurate harmonics to 144 Mc. Trimmer on oscillator for zero beat with WWV. Xtal accuracy 0.005%. Power requirements, 15v. d.c. at 14 mA. Size 2½" x 1¾". $22.00 inc. tax.

★ **SWITCH POTS**
Miniature transistor radio type pots. 2 megohms and 5 megohms. 12c each or 10 for $1.00.

★ **DYNAMIC MICROPHONES**
DX29 high impedance, with in-built gain control and desk stand. Response 100-15,000 c.p.s. $7.50.

★ **MILLER 455 Kc. PRE-WIRED I.F. STRIPS**
Comprises two i.f. stages, ceramic filter, diode detector, 55 db. gain, NPN silicon transistors, d.c. requirements 6v. d.c. 2 mA., size 1½ x ½ x ½ inch. $8.70 inc. tax.

★ **TR10A MULTIMETERS**
100,000 ohms per volt. Ranges, d.c. volts: 0.5, 2.5, 10, 50, 250, 500, 1K; a.c. volts: 2.5, 10, 50, 250, 1K; d.c. current: 10 uA., 1 mA., 25 mA., 250 mA. 10 amp.; resistance: 20K, 200K ohms, 2 megohms, 20 megohms. To clear, $25.95.

★ **POTENTIOMETERS**
Wire wound, 40c each; carbon, 25c each.

★ **RESISTORS**
¼ watt, I.R.C., Welwyn, Eire, Ducon, Philips, $2 per 100.

★ **416B PLANAR TRIODES**
Gold plated. Special. Ideal for 432 or 144 Mc. $4.00 ea.

ANY QUERIES

Beginners are welcome, ask Jim and Laurie Gardiner any questions. They are Amateur Radio operators and will be only too pleased to assist.

★ **CRYSTALS**
Personal shoppers only, $1 each.

★ **SPECIALS**
New 815 valve, $1. New DA41 (TZ40), $1.50.
3000 type Relays, 50c each.
Inter-Office Phones, 15-station type, $4 each.
7-pin skirted Valve Sockets, P.T.F.E. insulation, silver plated, only 20c each, c/w. shield.
Speaker Transformers: 7000 ohms to 2 ohms; 10,000 ohms to 3.5 ohms; 50c each.
9-pin skirted P.T.F.E. Valve Sockets with shield, 50c ea.
3 uF. 1000v. d.c. Block Capacitors. Only 25c each or $2 per dozen

ALL ITEMS FREIGHT EXTRA

UNITED TRADE SALES PTY. LTD.

280 LONSDALE ST., MELBOURNE, VIC. (Opp. Myers) Phone 32-3815

As Modern as tomorrow!

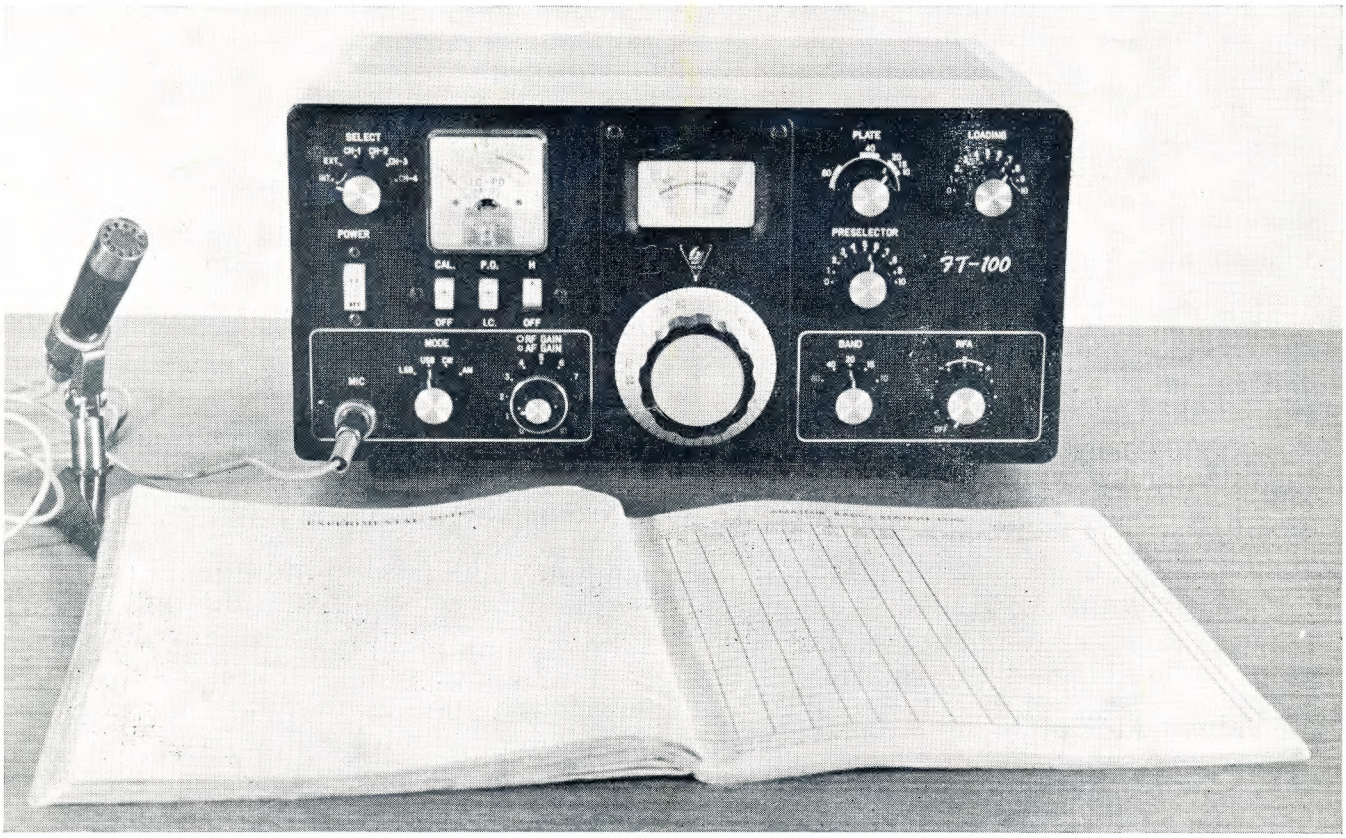

YAESU

Yaesu FT-100 Transceiver

FIVE BANDS – BUILT-IN POWER SUPPLY – TRANSISTORISED

Combining all the features you expect in a modern s.s.b. transceiver, PLUS many more:–

THE FT-100 SSB-CW-AM Transceiver incorporates a selective ultra-modern six-crystal lattice filter designed to give excellent audio quality and an easy-to-tune signal. Use of transistors ensures reliability with low current drain. Ideal for portable or mobile. Overall transmission efficiency approx. 45%! Receiver fully transistorised, drain 1 amp.; transmit standby, 2½ amp.; transmitting average, 8-10 amp.

SELF-CONTAINED power supply is built-in, voltage regulated, can be used on 230v. a.c., 50 c/s., and 12v. d.c. simply by plugging in the special power cords provided. Makes mobile, portable or home station operation a dream.

FACILITIES: Selectable USB-LSB-CW-AM. Provision for external VFO, plus built-in facility of a minimum of four crystal-locked channels, and 100 kc. calibrator. Dial is similar to that used on the larger "F" Series equipment—precision gear driven type giving accurate linear tuning with 1 kc. readout. Exceptionally stable VFO, no warm-up. Frequency ranges: 3.5-4, 7-7.5, 14-14.5, 21-21.5, 28.5-29 Mc. Only valves used are transmitter driver 1 x 12BY7 and p.a. 2 x 6JM6. Rated at approx. 120w. p.e.p. input. Suitable for standard p.t.t. high impedance microphone. Dual "S" meter and p.a. cathode current, a.l.c., 10 kc. off-set tuning, variable antenna loading, antenna relay. 25 transistors, 32 diodes, 3 valves. Conservatively rated, heavy duty power transformer for best regulation and cool operation. Connections at rear for co-ax. antenna line, power, speaker, VOX and linear control. Size 6" x 13" x 10½". Professionally finished in black enamel with white etched panel.

NOW AVAILABLE EX STOCK

We stock "F" Series valves, diodes, matching speakers and spares; TA-33JR tri-band beams, SWR meters, co-axial connectors, etc. All prices incl. S.T., freight extra.

Australian Agents: **BAIL ELECTRONIC SERVICES**
60 Shannon St., Box Hill Nth., Vic., 3129. Ph. 89-2213

VK2 Rep.: **MOSMAN RADIO SERVICES**
11 Ruby St., Mosman, N.S.W., 2088. Phone 96-5342 (Day and Night)